SKYLINE FURNITURE MFG.

410 HEADBOARD/BED

Assembly Instructions for 410, 100, & 100NB Series

HEADBOARD COMPONENTS

(1) Headboard*

*images might vary from actual product

(2) wings*

(2) metal legs

HEADBOARD & SIDE RAILS HARDWARE

(8) 2” x 5/16” bolts

(10) 1” x 5/16” bolts

(4) 1” x ¼” bolts

You will need:
- phillips screwdriver
- flat head screwdriver
- pliers

(26) 1¼” washers

(4) ¼” nuts

*Open all hardware packets before proceeding

If you have any questions, please call us at 1.800.542.7553

LIMITED WARRANTY

SKYLINE FURNITURE INC. guarantees its upholstered furniture against defects in construction for a period of one (1) year. When a structural defect is brought to our attention, we will repair or replace it at our option at no charge to the customer (includes parts and labor, not transportation costs). Fabric wearability for upholstered furniture is not covered by the warranty. Vacuum for regular cleaning.

PLEASE DISPOSE OF PLASTIC BAG (S) AND CARTON (S) RESPONSIBLY.

LIMITE DE GARANTIA

SKYLINE FURNITURE INC. garantiza sus muebles tapizados contra defectos en construccion por un periodo de un (1) ano. Cuando un problema de estructura es traido a nuestra atencion, nosotros repararemos o remplazaremos sin ningun cargo a nuestro cliente (incluye partes y trabajo, no costo en transportacion). Descoloramiento del material de muebles tapizados no es cubierto por la garantia. Regularmente puede aspirar.

POR FAVOR TIRAR BOLSA (S) Y CAJA (S) RESPONSABLEMENTE.

GARANTIE LIMITÉE

SKYLINE FURNITURE INC. garantit ses meubles rembourrés contre les défauts de construction pendant une période d’un (1) an. Lorsqu’un vice de construction nous est signalé, nous réparons ou remplaçons le meuble, selon notre choix, sans frais pour le client (incluant les pièces et la main-d’oeuvre, mais excluant les frais de transport). La durabilité du tissu des meubles rembourrés n’est pas couverte par la garantie. Nettoyer régulièrement avec un aspirateur.
VEUILLEZ JETER LE OU LES SAC(S) EN PLASTIQUE ET BOÎTE(S) DE FAÇON RESPONSABLE.

SKYLINE
FURNITURE
MFG.

BED COMPONENTS

(4) legs
for all sizes

support legs
(1) Twin
(2) Full
(3) Queen
(6) King/California King

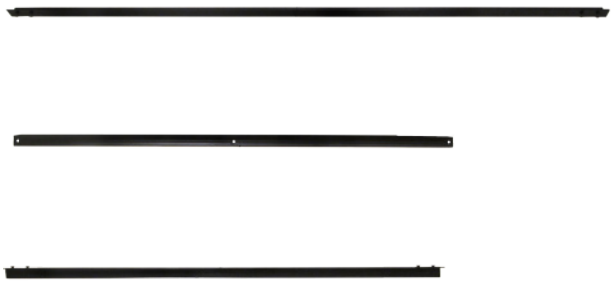

(2) side rails
for all sizes

support rails
(1) Twin/ Full/ Queen
(3) King/California King

(2) end rails
for all sizes

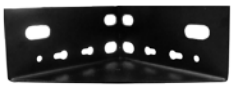

(4) corner brackets
for all sizes

(1) upholstered foot rail
for all sizes

(2) upholstered side rails
for all sizes

BED HARDWARE

1" x ¼" bolts
(1) Twin
(2) Full
(3) Queen
(6) King/California King

(4) ¾" x 5/16" bolts
for all sizes

¼" bolts
(10) Twin/ Full/ Queen
(14) King/California King

¾" washer
(smaller center)
(1) Twin
(2) Full
(3) Queen
(6) King/California King

(4) ¾" washer
(larger center)
for all sizes

¼" nuts
(10) Twin/ Full/ Queen
(14) King/California King

(8) ¾" screws
for all sizes

(2) L Brackets
for all sizes

(1) wrench
for all sizes

(1) 5/32" L wrench
for all sizes

(1) 3/16" L wrench
for all sizes

SKYLINE
FURNITURE
MFG.

Step 1

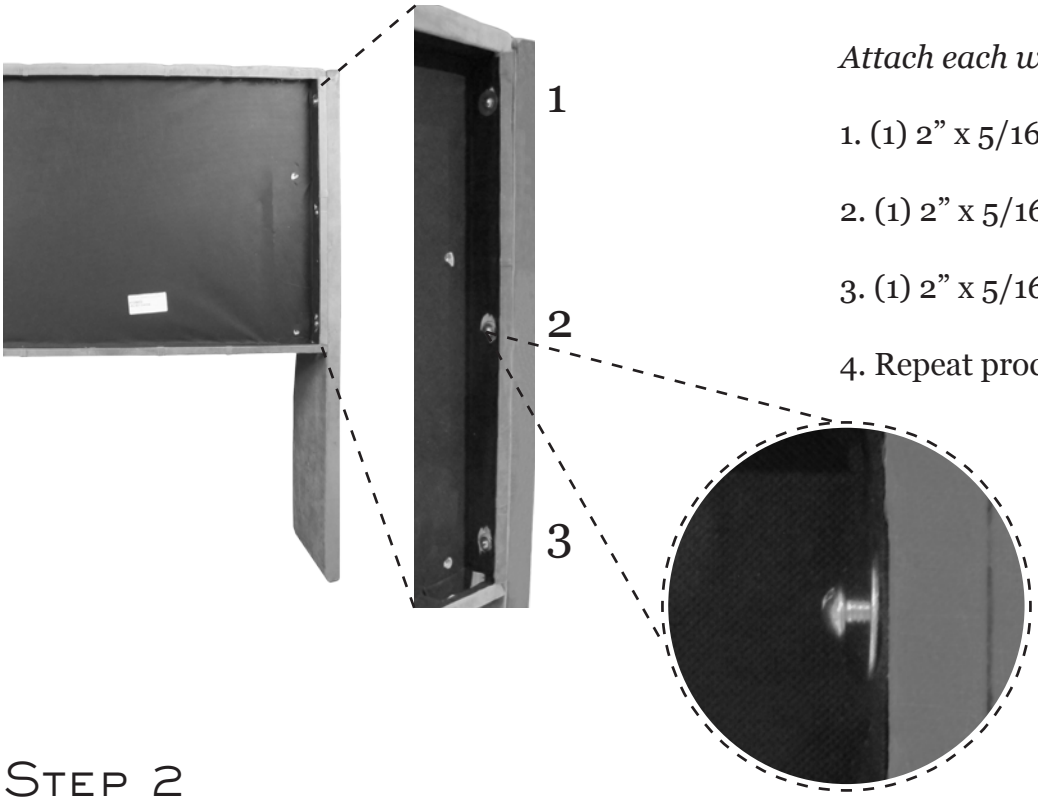

Attach each wing to headboard using:

1. (1) 2” x 5/16” bolt and (1) 1¼” washer
2. (1) 2” x 5/16” bolts and (1) 1¼” washer
3. (1) 2” x 5/16” bolts and (1) 1¼” washer
4. Repeat process for the other wing.

Step 2

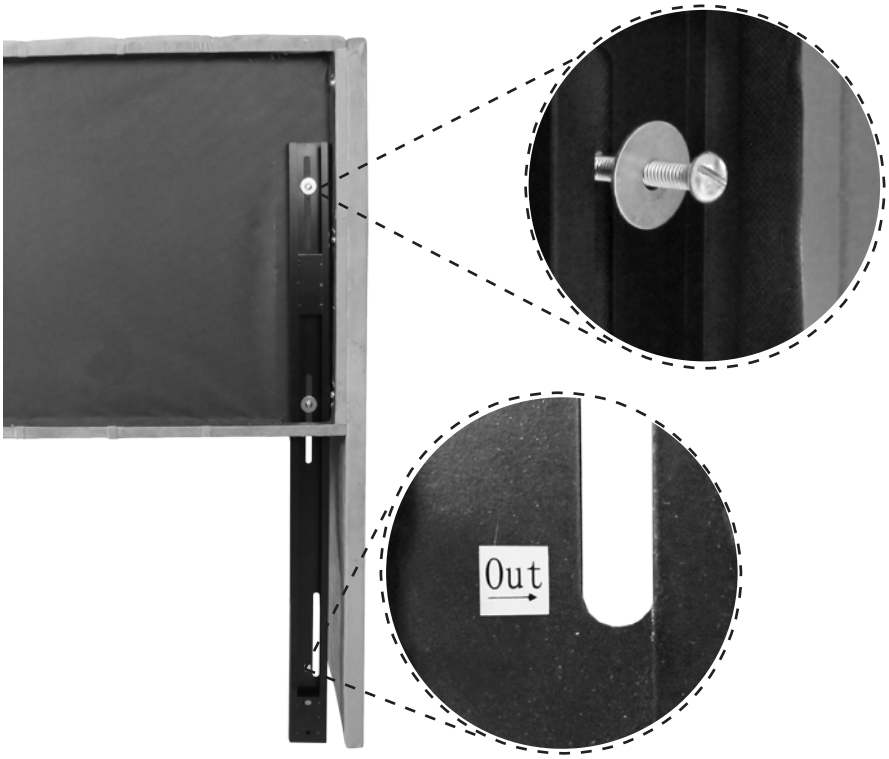

Insert metal legs through the holes in the headboard. Make sure that you place the correct leg facing “Out.”

Attach each metal leg to the headboard using (2) 1” x 5/16” bolts and (2) 1¼” washers for each leg.

Continue onto step 3 if building a bed or step 5 to attach the headboard to your bed frame.

SKYLINE
FURNITURE
MFG.

Step 3

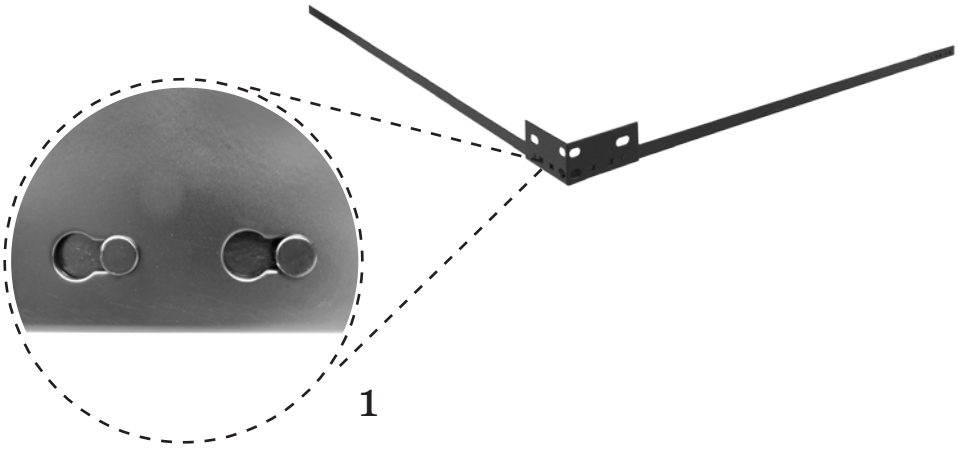

1. Attach side rail and end rail to corner bracket. Make sure to align holes and snap into thinner slot.

Continue this action until you have a rectangular frame.

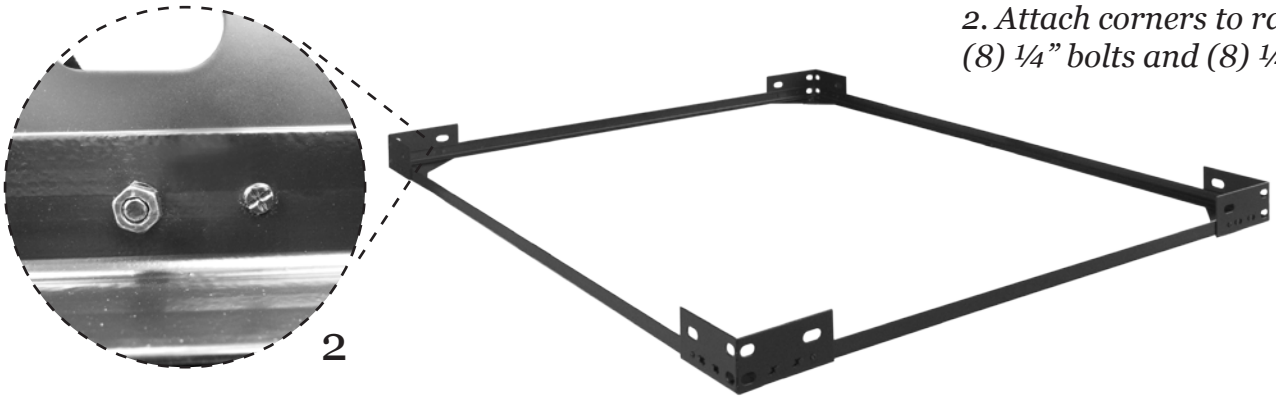

2. Attach corners to rails using (8) ¼" bolts and (8) ¼" nuts.

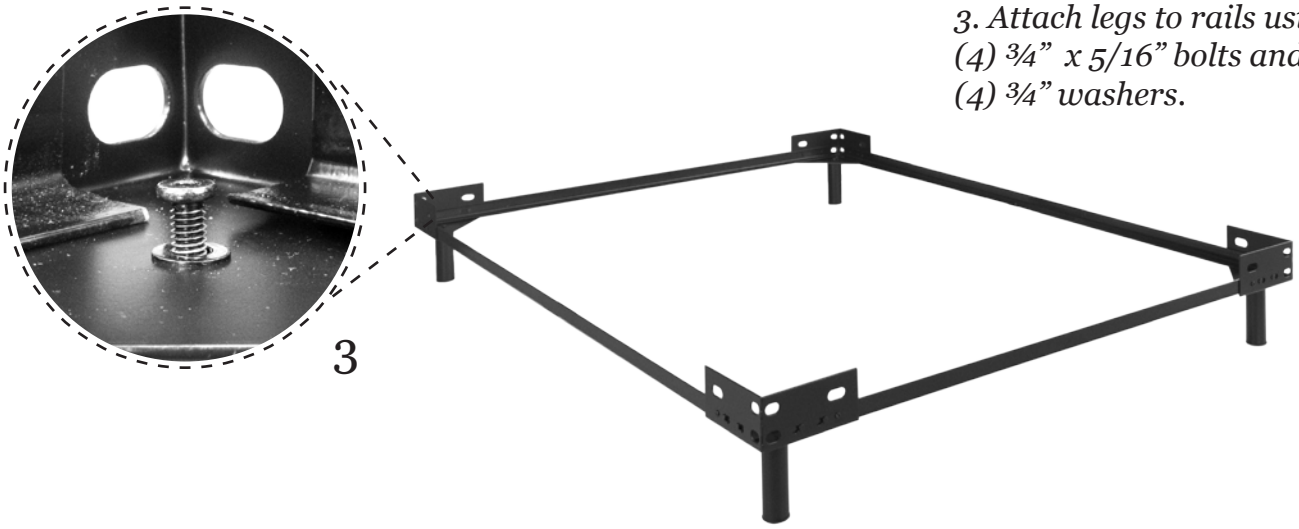

3. Attach legs to rails using (4) ¾" x 5/16" bolts and (4) ¾" washers.

SKYLINE
FURNITURE
MFG.

Step 4

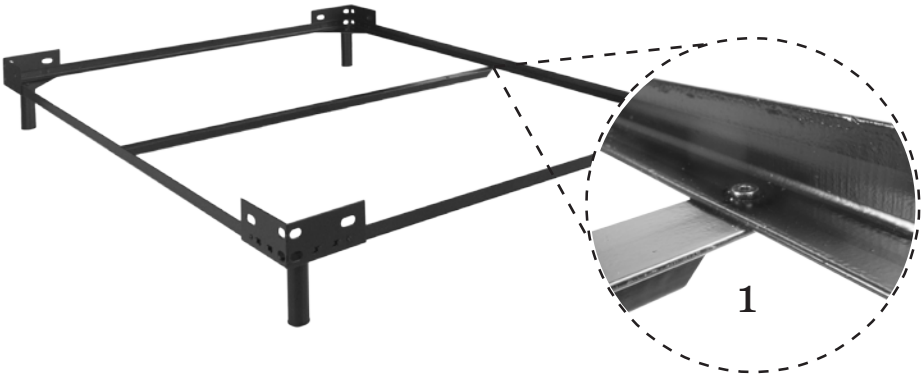

1. Attach each support bar using (2) ¼" bolts and (2) ¼" nuts. Make sure to attach the support bar underneath the bed frame.

Note:

Twin/ Full/ Queen = 1 support bar

King/California King = 3 support bars

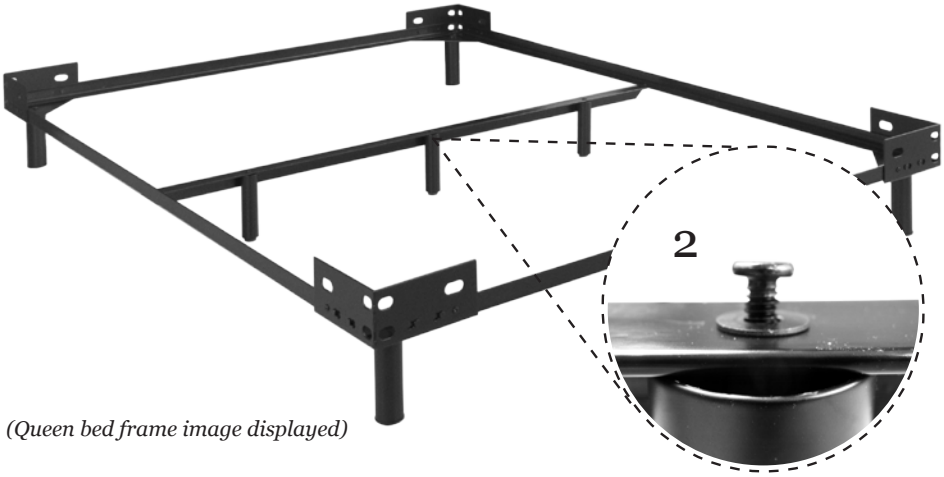

(Queen bed frame image displayed)

2. Attach each support leg to the bar using (1) 1" x ¼" bolts and (1) ¾" washer.

Note:

Twin = 1 support leg

Full = 2 support legs

Queen = 3 support legs

King/California King = 6 support legs. (2 legs for each support bar)

Step 5

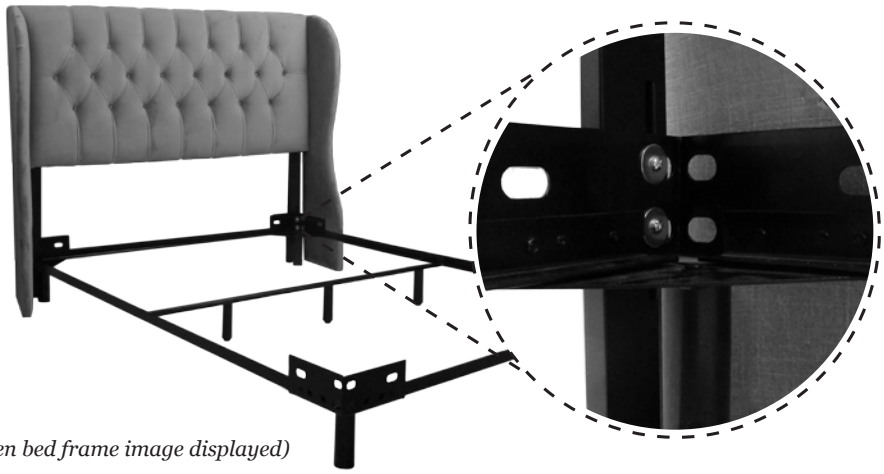

(Queen bed frame image displayed)

Attach bed frame to headboard using (4) 1" x ¼" bolts, (8) 1¼" washers, and (4) ¼" nuts.*

** Use a washer on each side of the metal legs when attaching headboard to the bed frame.*

SKYLINE
FURNITURE
MFG.

Step 6

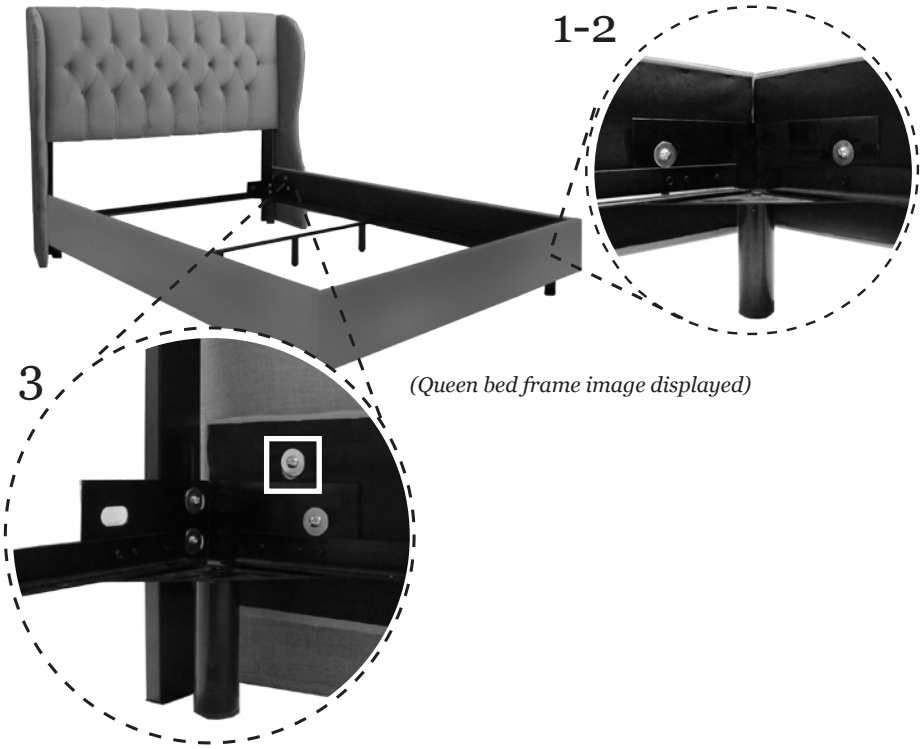

(Queen bed frame image displayed)

1. Use (6) 1" x 5/16" bolts, (6) 1 ¼" washers to attach rails to bed frame loosely. Screw in side rails before attaching the foot rail.

2. Push side rails towards foot rail, so that there is no gap.

3. Use (2) 2" x 5/16" bolts and (2) 1 ¼ washers for the top hole (see image). Begin final tightening of all bolts.

Step 7

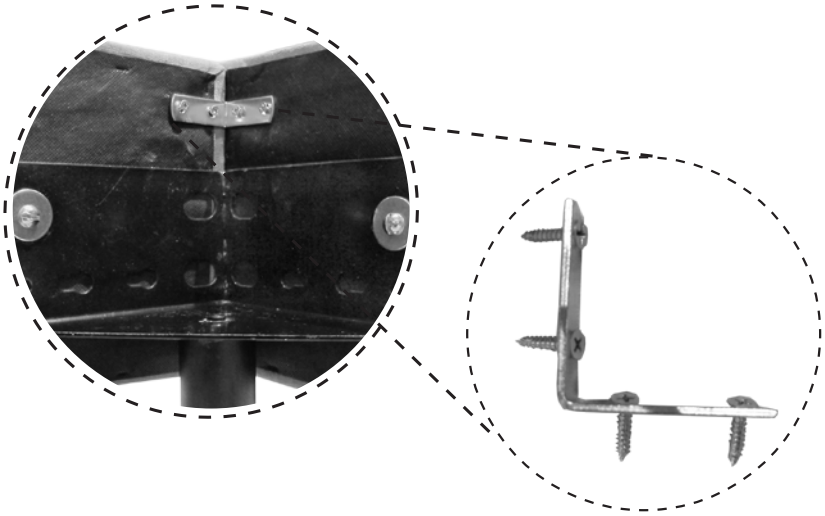

With a phillips screwdriver, attach (2) L brackets and (8) ¾" self-tapping screws in the corners of the foot rail. This is needed to increase stability of upholstered rails.