Williamsburg

OMNIA® LEATHER FURNITURE

9-18-06

Note: All sizes are approximate.

Features

- *Standard:*
  - *All Full or Top-Grain Leather*
  - *All hardwood frames*
  - *Large Nailheads Spaced*
- *Options:*
  - *Down Seats (Additional Charges Apply)*
  - *No. 33 Firm Seating*
- *Sleeper Options:*
  - *Deluxe Queen Mattress (Additional Charges Apply)*
  - *Air Dream Queen Mattress (Additional Charges Apply)*
- *Special Orders shipped within 4-6 weeks*

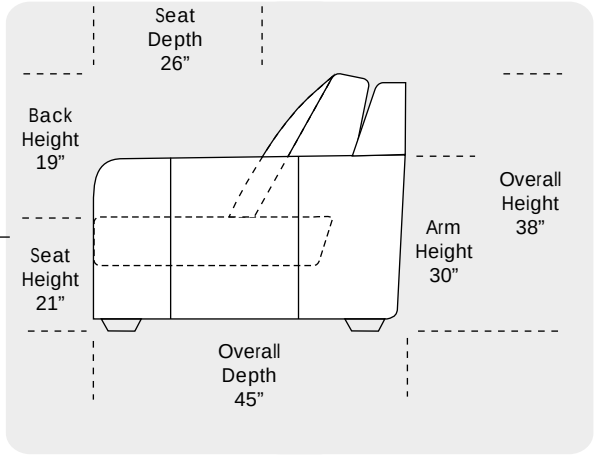

Standard

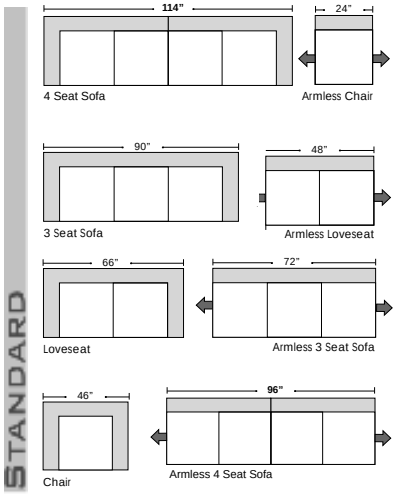

Return

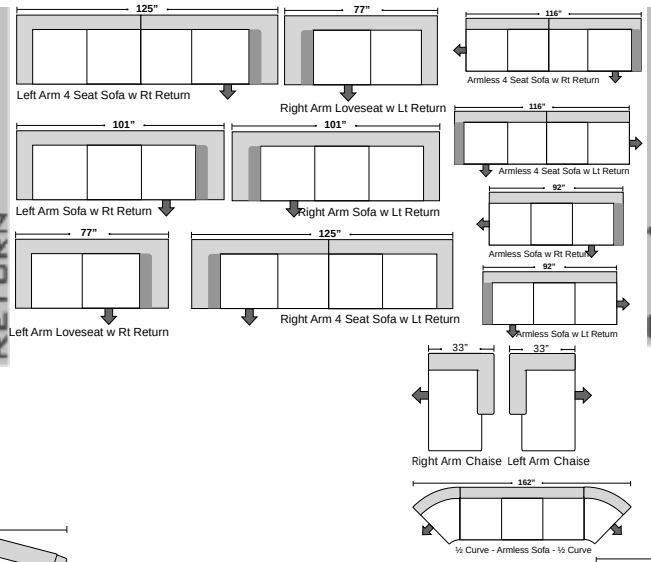

One Arm

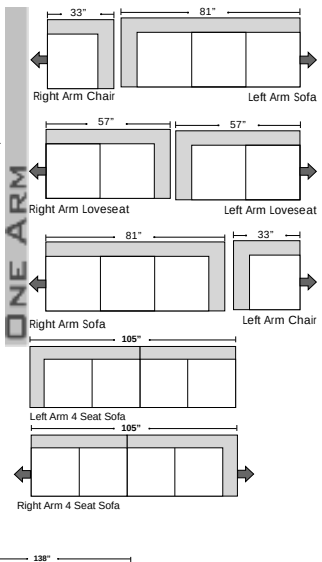

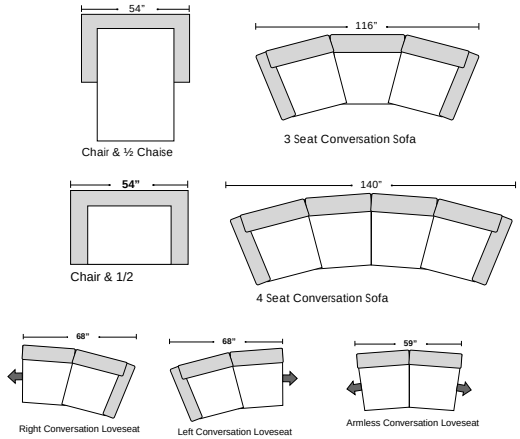

1/3 Curve

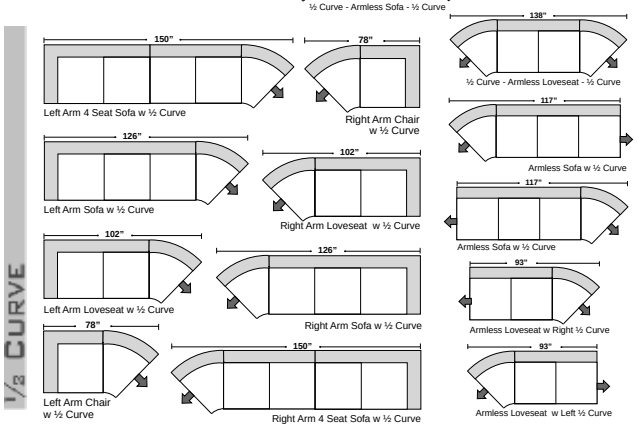

Ottoman

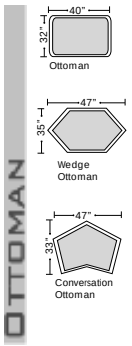
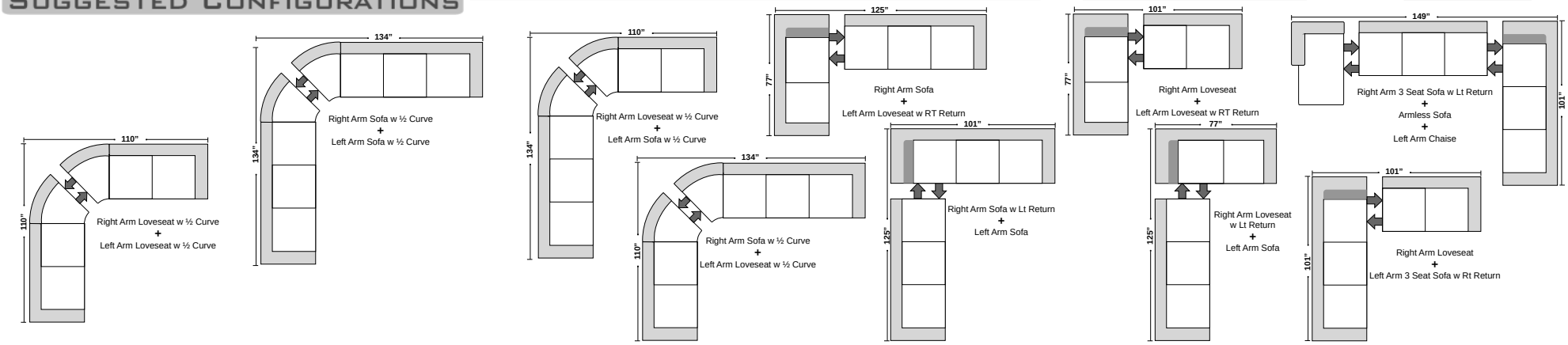
Suggested Configurations