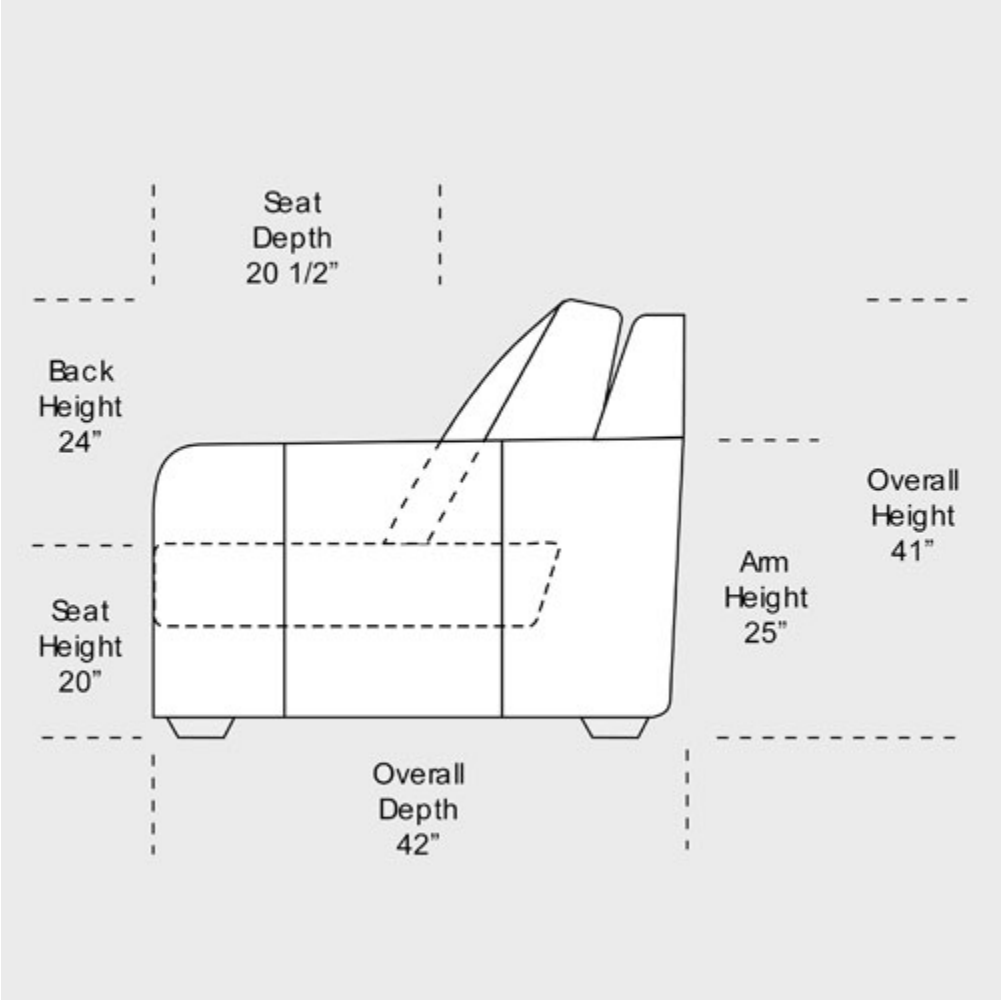
Seat
Depth
20 1/2”
Back
Height
24”
Seat
Height
20”
Overall
Depth
42”
Arm
Height
25”
Overall
Height
41”