WHITEHAUS® COLLECTION
A Collection of Fine Products

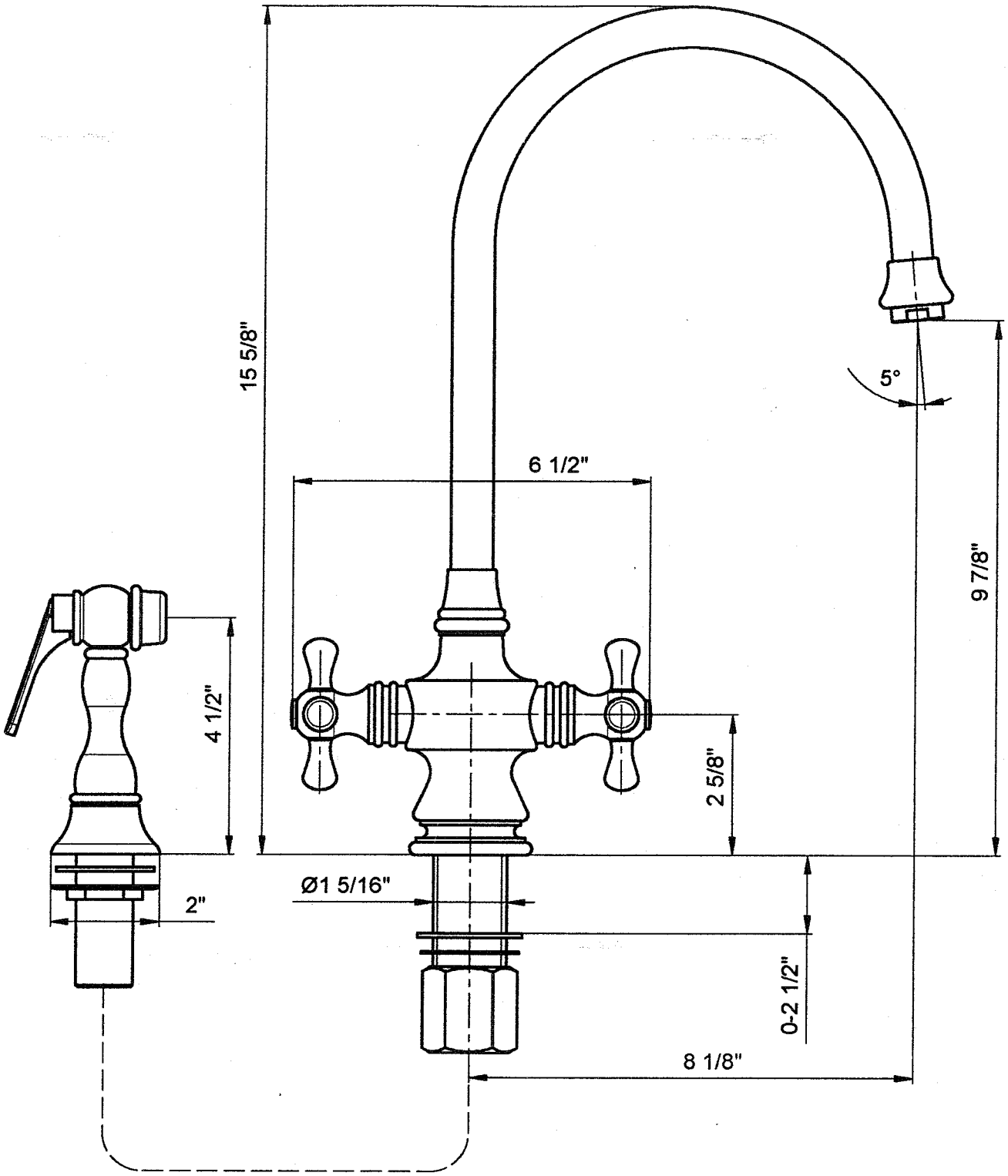

WHKSDCR3-8101