COASTER® FINE FURNITURE

100520

BAR TABLE

ASSEMBLY INSTRUCTION
COASTER FINE FURNITURE

www.coastercompany.com

2012/12/19

ASSEMBLY INSTRUCTION

ASSEMBLY TIPS:

1.Remove hardware from box and sort by size.

2.Please check to see that all hardware and parts are present prior to start of assembly.

3.Please follow attached instructions in the same sequence as numbered to assure fast & easy assembly.

Warning ! !

1. Don't attempt to repair or modify parts that are broken or defective .Please contact the store immediately.
2. This product is for home use only and not intended for commercial establishment.

PARTS IDENTIFICATION

(A) LEG A 1 PC

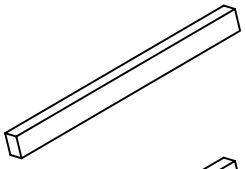

(B) LEG B 1 PC

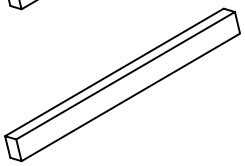

(C) LEG C 1 PC

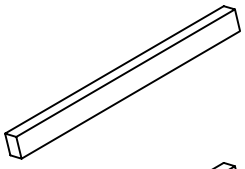

(D) LEG D 1 PC

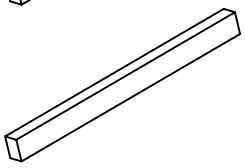

(E) BOTTOM PANEL

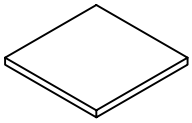

1 PC

(F) CONNECTING PANEL

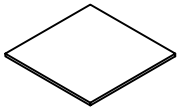

1 PC

(F) TOP PANEL

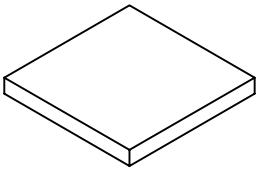

1 PC

Z	HARDWARE PACKAGE		
NO	DESCRIPTION	FIGURE	Q'TY
1	FLAT HEAD BOLT M6×25mm	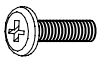	4 pcs
2	SMALL BOLT ⌀7×48mm		8 pcs
3	LARGE BOLT ⌀7×58mm		8 pcs
4	DOWEL ⌀8×25mm		11 pcs
5	GLUE 10g	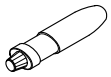	1 pc

① 4 dip into 5 and insert into A&B&C separately.
② B Align the hole with A and stand upright; C Align the hole with B and stand upright; D Align the hole with C and stand upright.

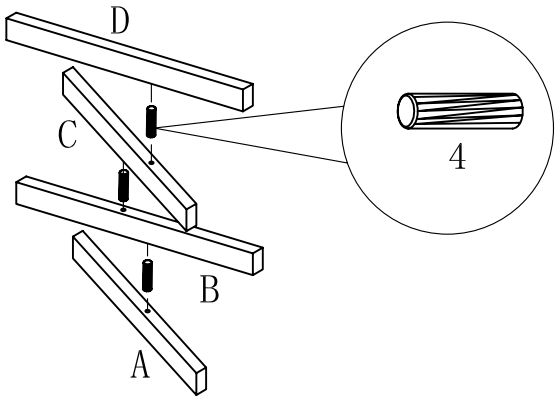

STEP1

STEP2

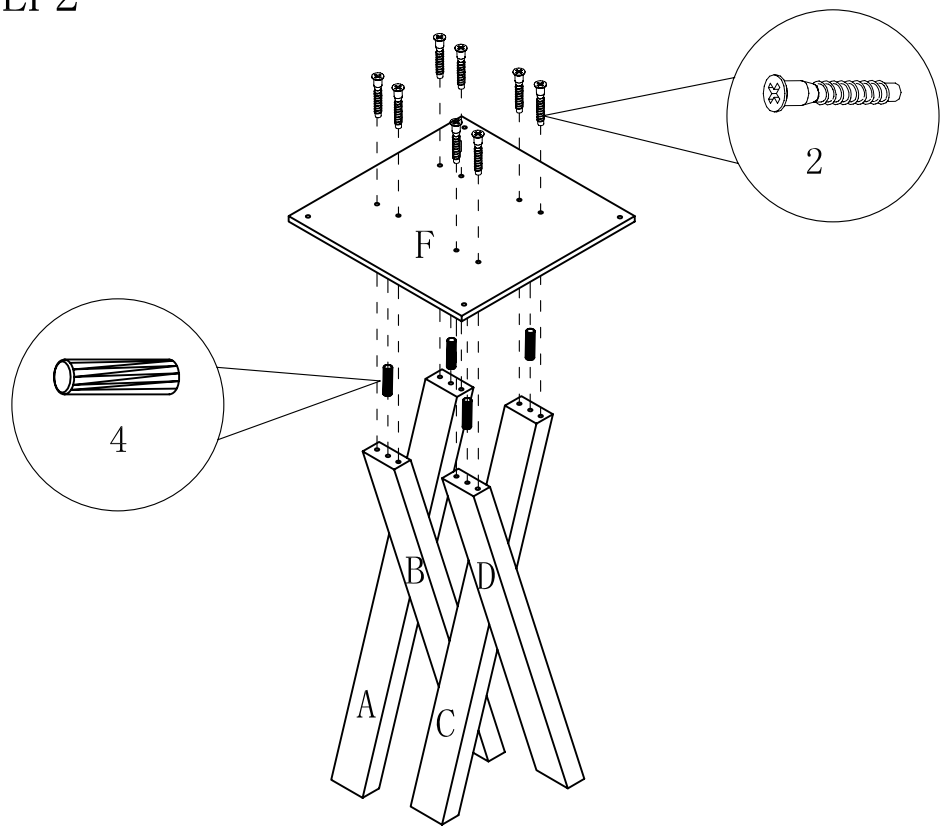

① 4 dip into 5 and insert into A&B&C&D separately.
② F Align the hole with A&B&C&D, insert 2 through F into A&B&C&D and screw down.

① 4 dip into 5 and insert into A&B&C&D separately.
② E Align the hole with A&B&C&D, insert 3 through E into A&B&C&D and screw down.

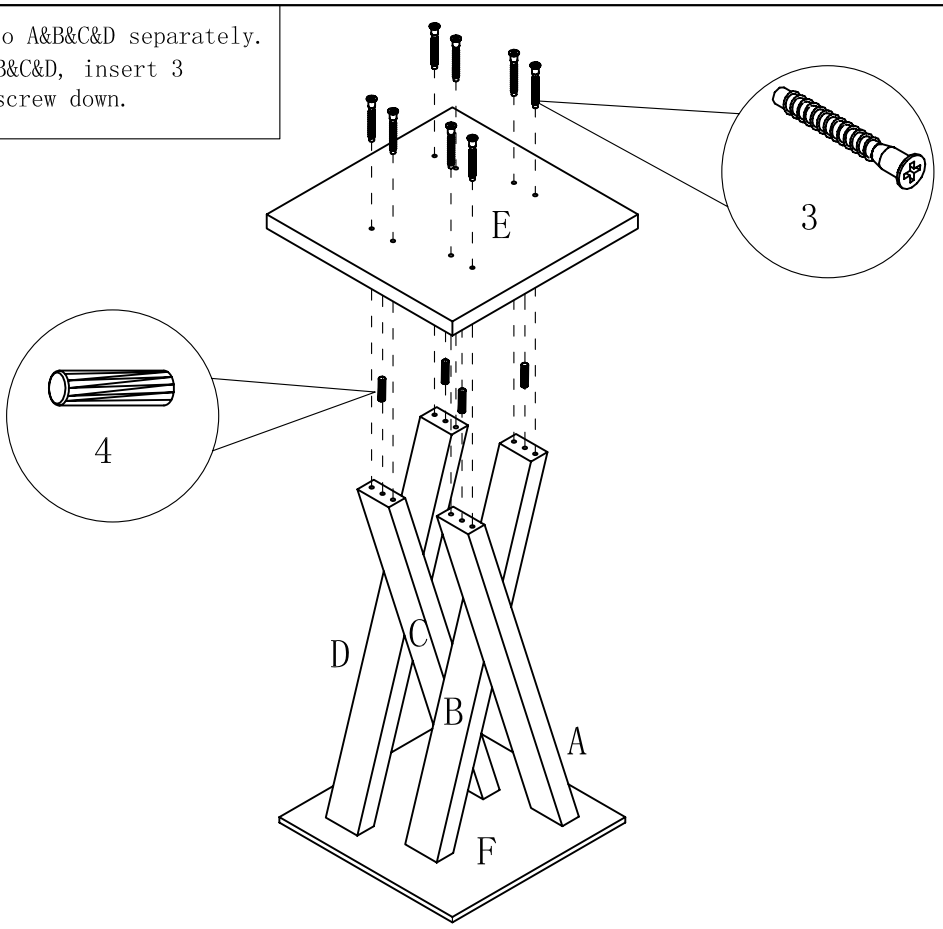

STEP3

STEP4

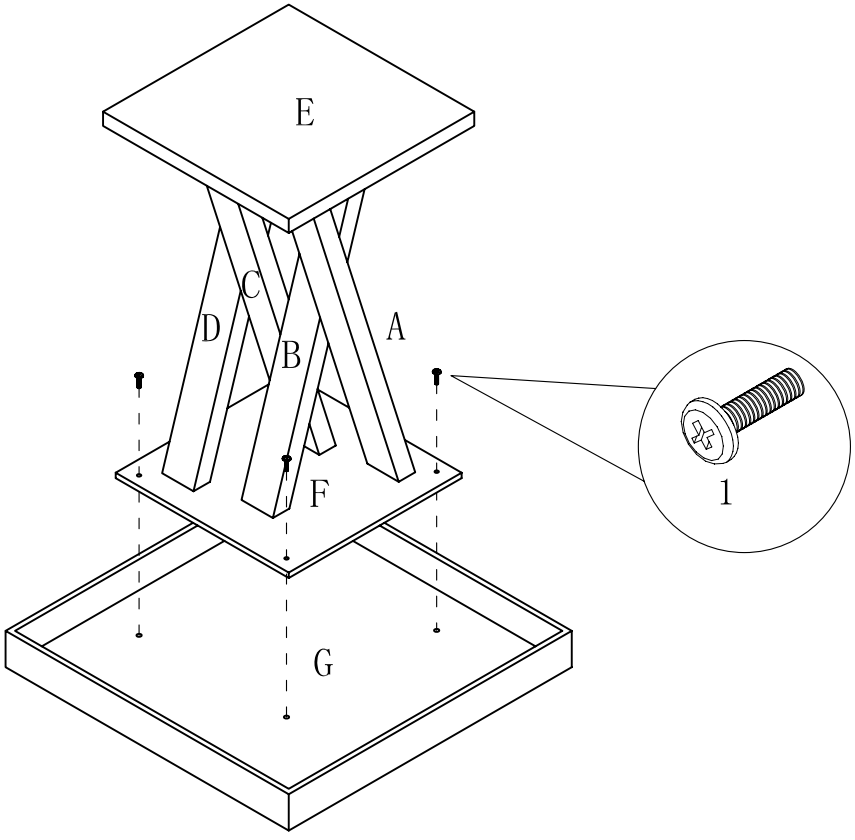

① F Align the hole with G, insert 1 through F into G and screw down.