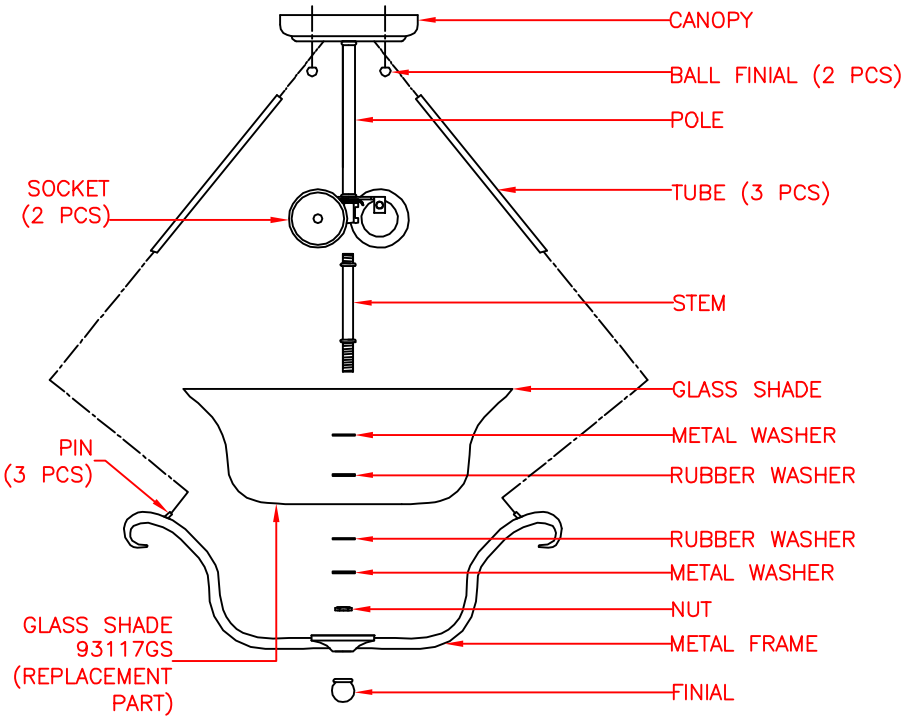

AVAILABLE PART IS:
93117GS (GLASS SHADE)

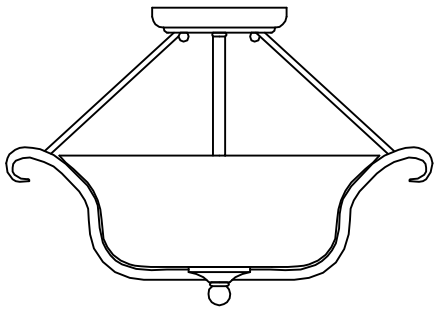

FIXTURE ASSEMBLED VIEW

PRODUCT SPECIFICATIONS

OVERALL ASSEMBLED DIMENSIONS

HEIGHT: 29.3 CM (11-1/2"), WIDTH: 42 CM (16-1/2") DIA.

- ☐ **2 LIGHTS:** UL LISTED. 60 WATT. MEDIUM BASE E-26 CERAMIC SOCKETS.
- ☐ **CANOPY:** PAINTED STEEL, 13.2 CM (5-3/16") DIA. x 2.5 CM (1") HEIGHT. (2) HOLES IN CANOPY FOR MOUNTING SCREWS TO PASS THROUGH.
- ☐ **POLE:** PAINTED STEEL, 1.2 CM (1/2") DIA. TUBING, 15 CM (4-7/8") LENGTH.
- ☐ **TUBES:** PAINTED STEEL, 0.6 CM (1/4") DIA. TUBING, 19.2 CM (7-9/16") LENGTH.
- ☐ **GLASS SHADE:** WHITE GLASS SHADE, 31.5 CM (12-7/16") DIA. MAX. x 11 CM (4-5/16") HEIGHT, SHAPED AS SHOWN.
- ☐ **METAL FRAME:** PAINTED STEEL, 2 CM (3/4") LENGTH x 1 CM (3/8") WIDTH OVAL TUBING, 42 CM (16-1/2") WIDTH x 13.1 CM (5-1/8") HEIGHT, SHAPED AS SHOWN.
- ☐ **SUPPLY WIRE:** UL LISTED. 18 AWG, 105°C, MUST EXTEND A MINIMUM OF 15.2 CM (6") FROM CENTER OF CANOPY, BLACK/WHITE COLOR, WIRES MUST BE LEAD FREE.
- ☐ **LABELS:** UL AND CSA OR CUL, MANUFACTURE DATE, MODEL # AND COUNTRY OF ORIGIN LABELS PROVIDED ON INSIDE OF CANOPY. WARNING LABEL FOR PARTS AND PARTS ARROW LABEL WERE STUCK ON INSIDE OF BOX. RELAMPING LABEL FOR 60 WATT TYPE "A" BULB PROVIDED ON SOCKET.

PACKAGING AND SHIPPING DETAILS

- ☐ THE ITEM IS DISASSEMBLED FOR SHIPPING AS SHOWN. EACH PART IS SECURED SO THEY CAN NOT MOVE DURING SHIPPING.
- ☐ HARDWARE PACK #005 PROVIDED. ENTIRE FIXTURE IS COVERED IN A CLOSED PLASTIC BAG WITH A SMALL BAG OF SILICA INSIDE.
- ☐ THE CARTON IS MADE OF DOUBLE WALL CORRUGATED CARDBOARD "A MA A". BROWN IN COLOR. THE INNER PACKING IS DIE-CUT CARDBOARD OR STYROFOAM TO PROTECT AND SECURE THE FIXTURE AND MUST PASS THE FEDEX AND ISTA-3A DROP TEST REQUIREMENTS.
- ☐ EACH CARTON SHALL BE PRINTED WITH A LINE DRAWING AND THE KENROY HOME NAME AND LOGO, MODEL NUMBER AND FINISH, EACH CARTON SHALL BE PROVIDED A UPC LABEL. THE UPC BAR CODE AS FOLLOWS: ORB=053392036607.

OTHER DETAILS

- ☐ ALL METAL PARTS MUST MATCH FINISH UNLESS OTHERWISE SPECIFIED.
- ☐ MODEL 93117ORB INSTALLATION INSTRUCTIONS ARE TO BE PACKED WITH FIXTURE, AND BE PRINTED CLEARLY ON QUALITY PAPER.
- ☐ ALL BAGS MUST BE LABELED WITH OFFICIAL "THIS BAG IS NOT A TOY" STATEMENT.
- ☐ ASSEMBLY TIME: 10 MINUTES.
- ☐ THE UL NUMBER IS E314733.
- ☐ DIMS OF BOX: 44 CM (17-5/16") LENGTH x 44 CM (17-5/16") WIDTH x 26 CM (10-1/4") HEIGHT. (CUFT.: 1.78')
- ☐ NET WEIGHT: 4.8 LBS. GROSS WEIGHT: 7.1 LBS.

KENROY HOME
3723 Regent Boulevard
JACKSONVILLE, FL. 32224
PHONE: 904-642-4340
FAX: 904-642-4150

THIS DOCUMENT AND THE INFORMATION THAT IT DISCLOSES IS THE EXCLUSIVE PROPERTY OF KENROY HOME. ANY REPRODUCTION OR USE OF THIS DRAWING IN PART OR IN WHOLE, WITHOUT THE EXPRESS CONSENT OF THE PROPRIETOR IS PROHIBITED. © 2013 KENROY HOME.

DATE: 5/29/2013	SCALE: NONE	DRAWN BY: JAMES	REVISION DATE: 7/3/2013 add weight REVISION DATE:	MODEL #: 93117ORB
			REVISION DATE:	FINISHES: ORB WITH HIGHLIGHT
REFERENCE: BASKET 2 LIGHT SEMI FLUSH		APPROVAL:	REVISION DATE:	PAGE: 1 OF: 1