2052 Quattro® Double Arm LED Wall Lamp

Dimensions:

Height: 5 ½"-32" ADJ.
Width: 3 ½"

Description:

Head: ½"H x 3 ½"W x 3 ½"D
Wall Plate: 2 ¾" SQ w/180° Rotation
Extension: 15"-33 ½" ADJ.
Switch: 3-Step Optical Dimmer

Lamping Options:

LED

LED Flat Panel, 6W
Warm White (3000K), 85 CRI
900 Lux @ 18"
100-240VAC Input w/LED Driver

Available Finishes:

Bright Satin Aluminum
2052.16

Gloss White
2052.60

Black
2052.63

Red/Yellow/Black
2052.69

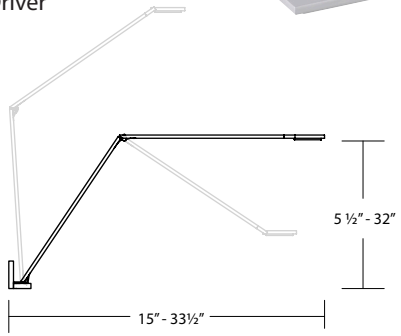

SONNEMAN®
A WAY OF LIGHT