CA4296
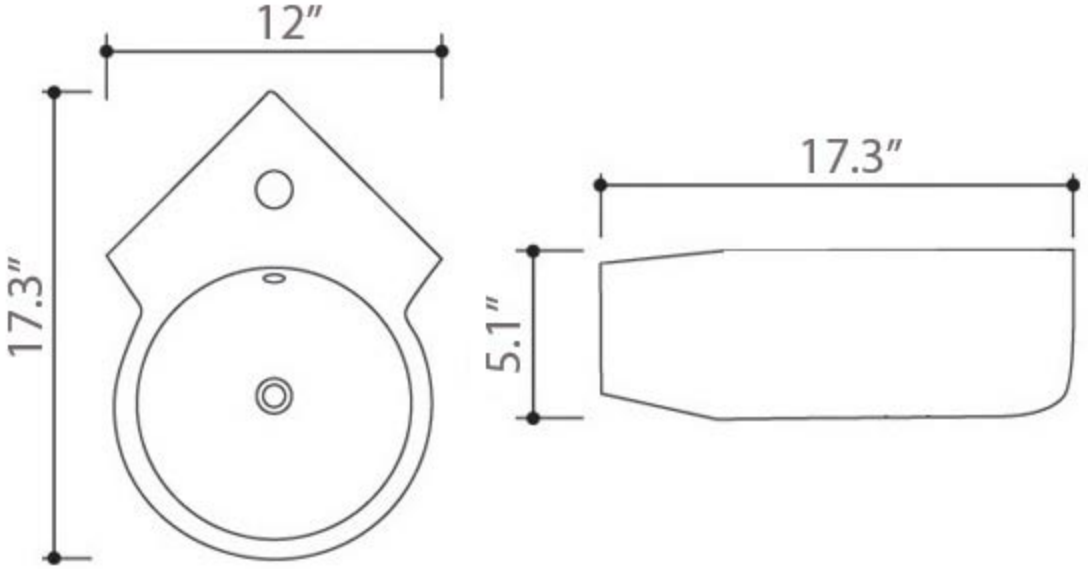
Size: 17.3″ x 12″ x 5.1″