C Table with Painted Glass

Model Number: 5172396

Finish: **Black**

OVERALL PRODUCT SIZE(in inches)

Cabinet: $15\frac{3}{4}$"(W)* $15\frac{3}{4}$"(D)*$23\frac{5}{8}$"(H)

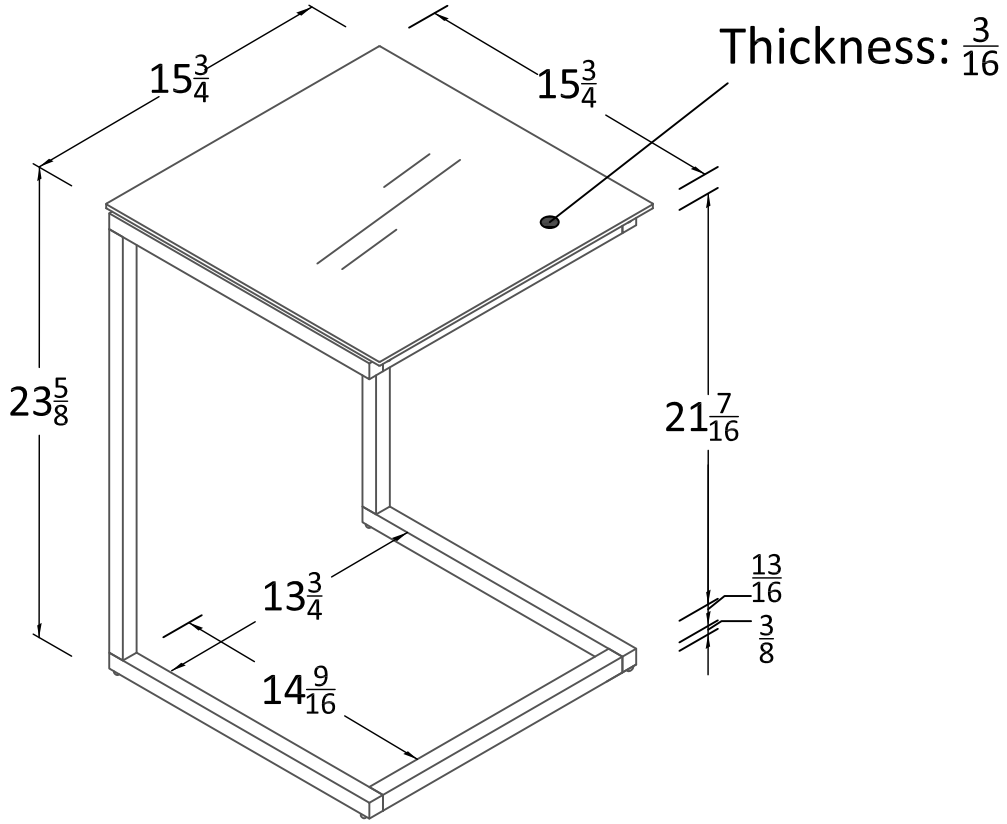
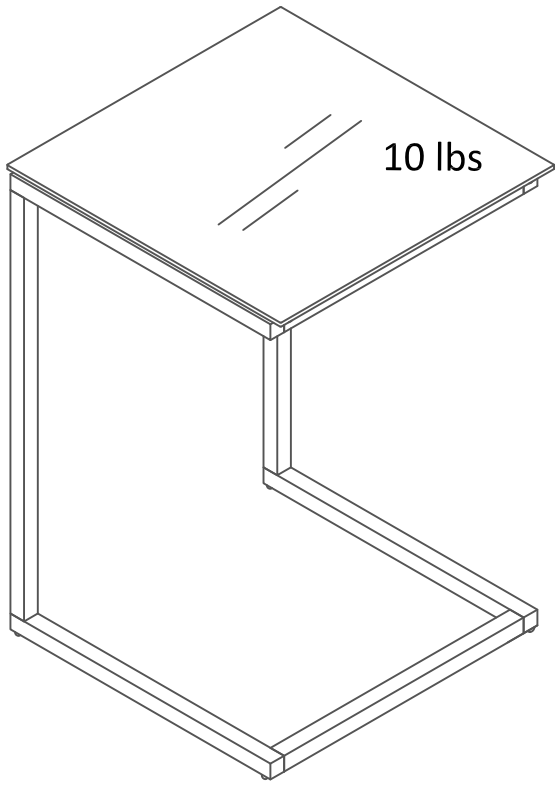
MAXIMUM WEIGHT CAPACITIES