TECHNICAL DATASHEET

Hudson Reed

Traditional Dual Exposed Thermostatic Shower Valve

Barcode	**5055146181538**
Product Code	A3091E
Finishes	Chrome
Product Type	Thermostatic Shower Valve
Water Pressure	LP1 - 0.1 bar pressure minimum
Standards NSF	BC588/1209, EN200 and/or WRc/
Requirement	Suitable for all plumbing systems

Guarantee & Aftercare

During installation extra care must be taken to avoid damaging the fittings. We provide a 20 year guarantee against faulty workmanship or materials (excluding serviceable parts), providing they have been installed, cared for and used in accordance with our instructions.

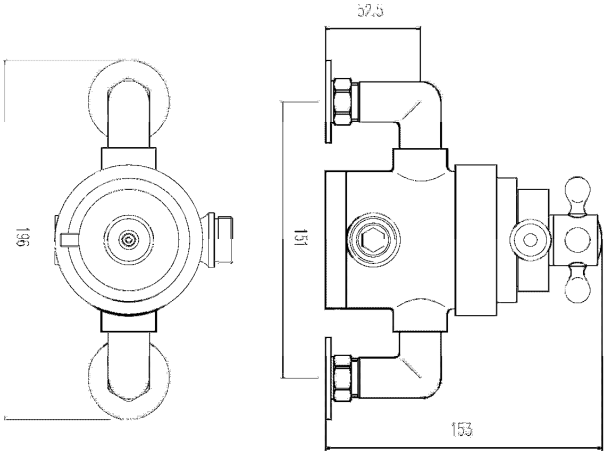

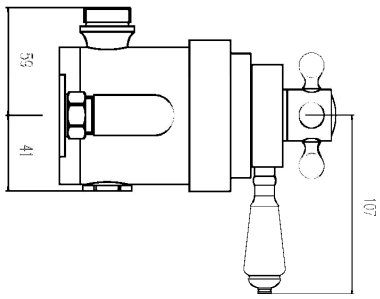

ADDITIONAL INFORMATION

- Can be fitted vertically or horizontally
- TMV2 Approved

Bar	Flow l/min
0.1	5.5
0.5	14.5
1	22
2	30
3	35

COMPLIANCE: Pending

CUSTOMER CARE:

For further information please call 01282 446789

KEY TO PRODUCT PRESSURE REQUIREMENTS

LP - 0.1 bar min **LP2 - 0.2 bar min** **MP - 0.5 bar min** **HP1 - 1 bar min** **HP2 - 2 bar min**

Ultra Finishing Ltd, Widow Hill Road, Heasandford Industrial Estate, Burnley, Lancashire, BB10 2BQ
Telephone: 01282 436934 Fax: 01282 428915 Web site: www.homeofultra.com