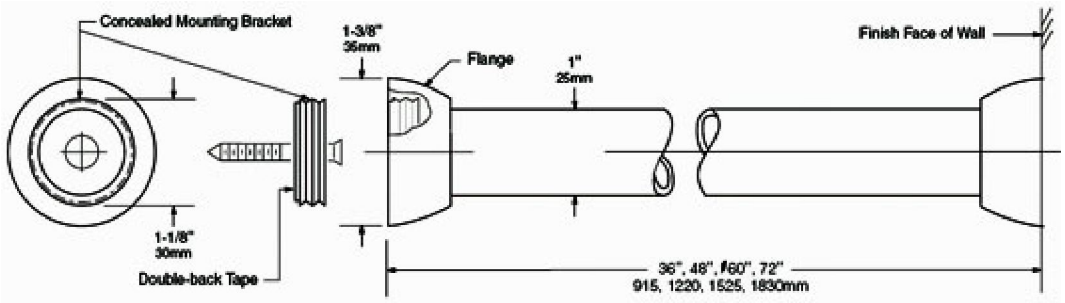
Concealed Mounting Bracket
1-3/8"
35mm
Flange
1"
25mm
Finish Face of Wall
1-1/8"
30mm
Double-back Tape
36", 48", 60", 72"
915, 1220, 1525, 1830mm