crosswater

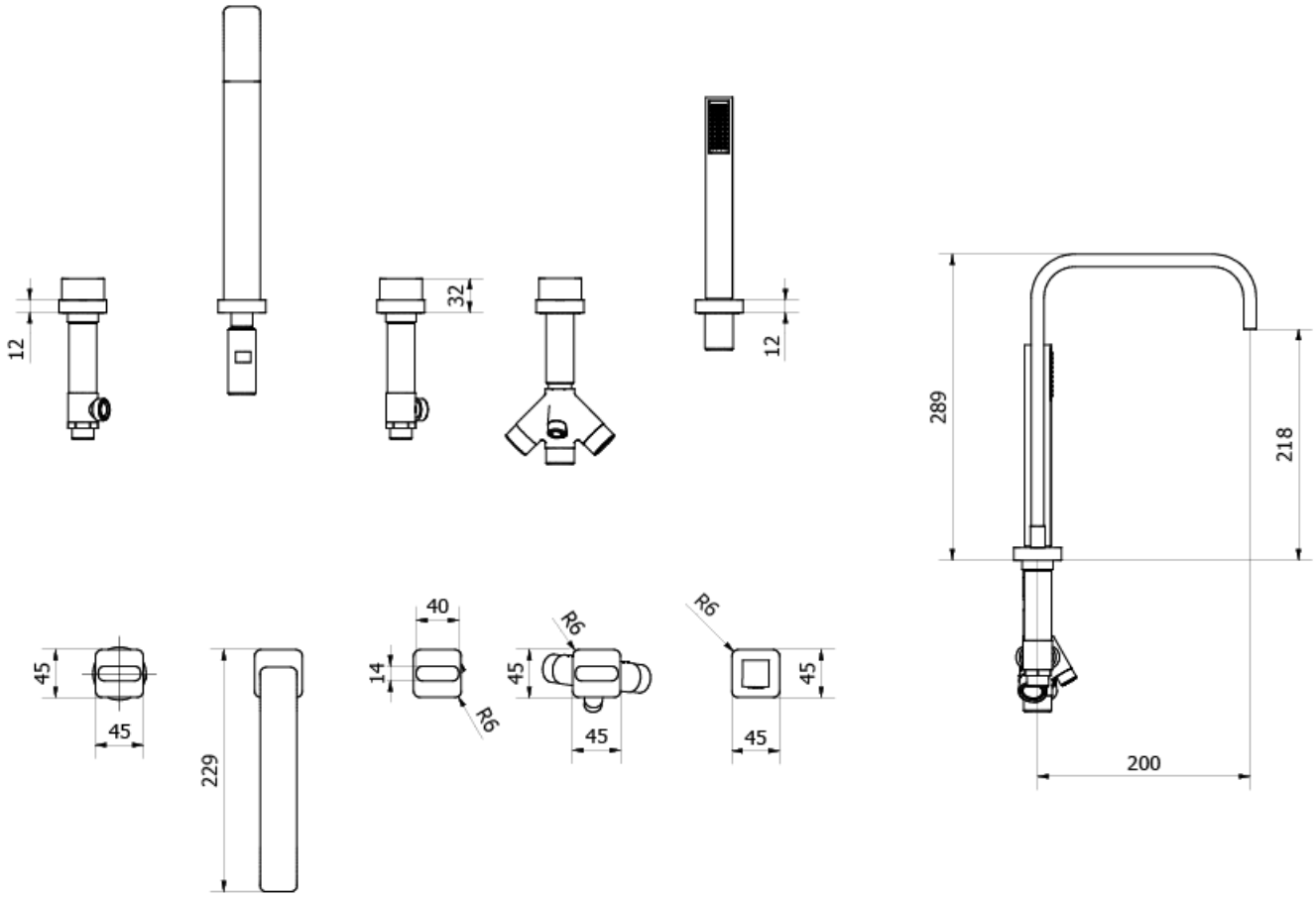

EE450DC - EDGE BATH 5 HOLE SET

With Kit Deck Mounted