crosswater

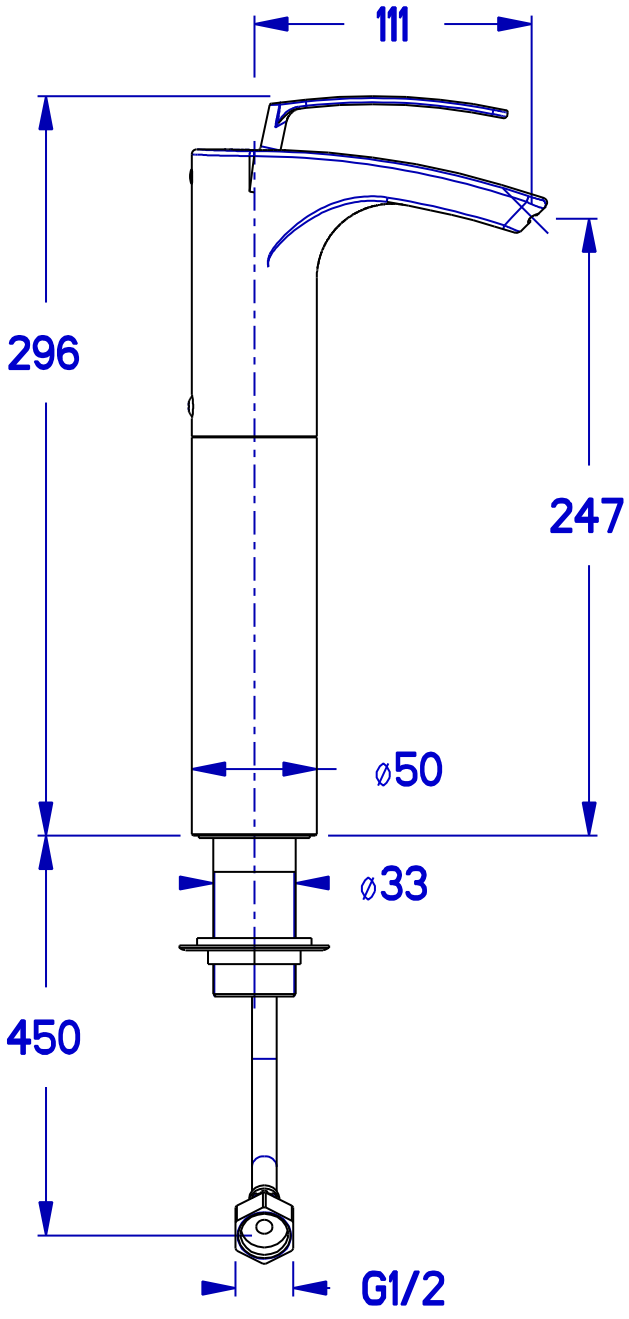

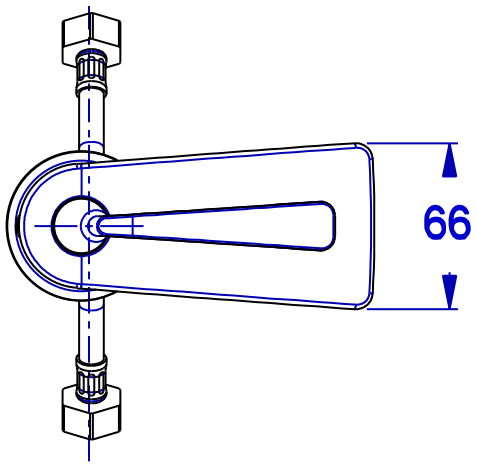

ES112DNC - ESSENCE BASIN TALL MONOBLOC

With No Pop-up Waste