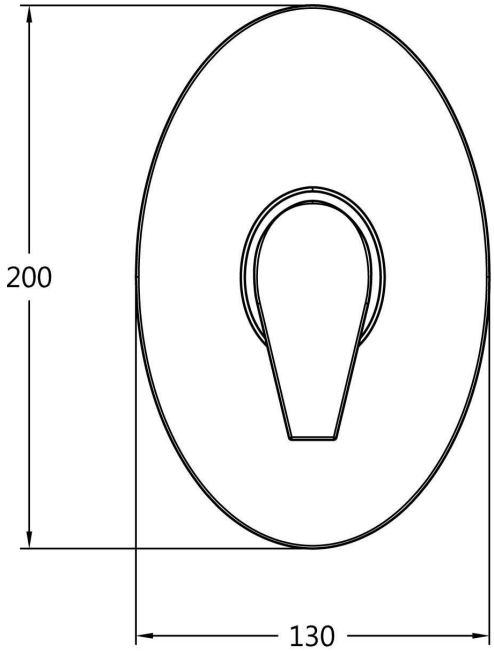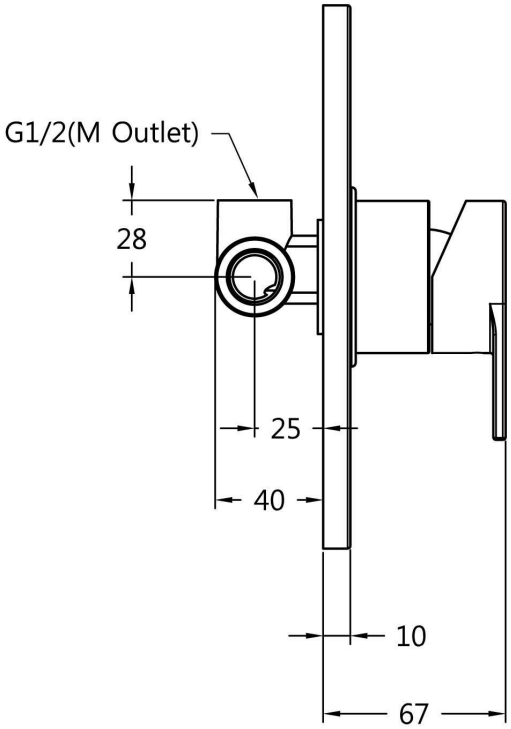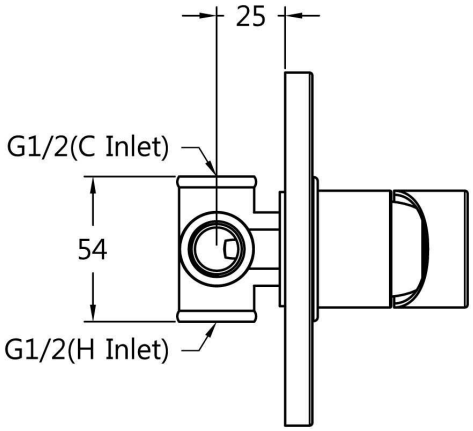TE0004RC – TEMPO manual shower valve recessed chrome