OUT

HERCULES
05-8961-34-B8

The photograph may not match the reference exactly. Please read the product description to identify the finish.

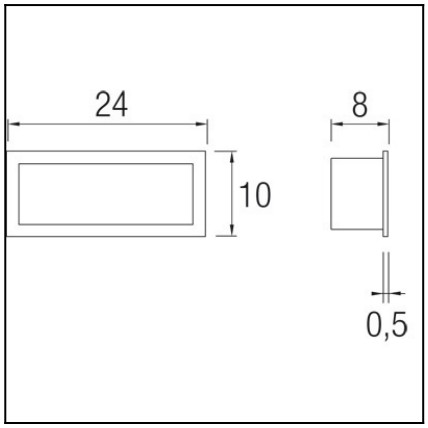

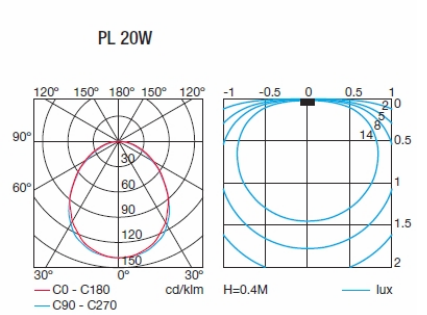

TECHNICAL CHARACTERISTICS

Type:	Wall fixture
IP Protection degrees:	IP44
IK Protection degrees:	IK08
Lampholder:	1 x E27
Power (W):	E27 MAX 60W
Voltage / Frequency:	220-240V/50-60Hz
Units per box:	18
Net Weight (Kg):	0.855
EAN:	8435111037195

E27 esfer.

MATERIALS / FINISHES

Structure material: Aluminium
Structure finish: Grey
Diffuser material: Glass
Diffuser finish: Matt

Leds-c4 reserves the right to make the necessary technical changes they deem adequate, in order to improve the features of the product.
Please consult the sales team to clarify any doubt.

(+34) 973 468 100
leds-c4@leds-c4.com
www.leds-c4.com