UKINOX®

SPECIFICATIONS

MODEL DSL 813
UNDERMOUNT TYPE

GENERAL

Fine quality sink bowls formed of 18 gauge BA 304 18/10 nickel bearing stainless steel.

DESIGN FEATURES

Bowl Depth : 10”
Coved Corners : Zero Radius Corners
Finish : Soft Satin Finish
Underside : Sound absorbing pads and special paint applied to dampen sound
Drain Opening : 3-1/2"

ACCESSORIES INCLUDED

Stainless Steel Bottom Grid
Hardwood Cutting Board

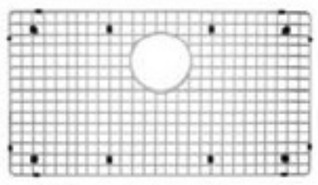

Stainless Steel Bottom Grid
GRS 813 SS

Hardwood Cutting Board
CB 813

SINK DIMENSIONS (INCHES)

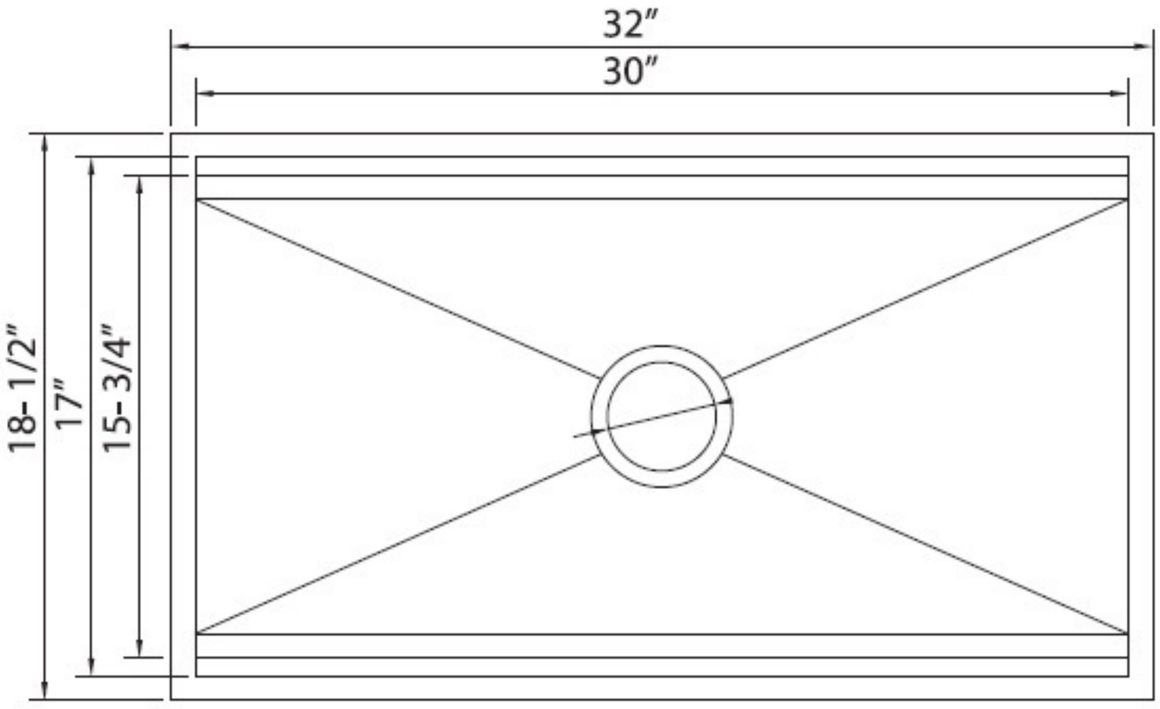

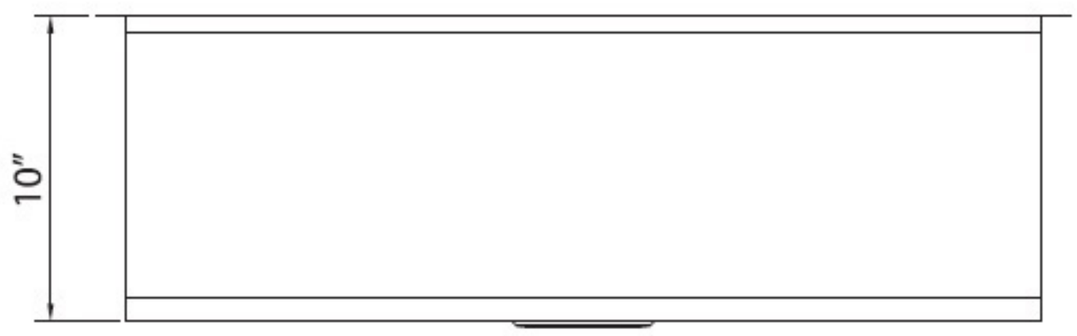

Minimum Cabinet Size 36"
Ship Weight 36 lbs

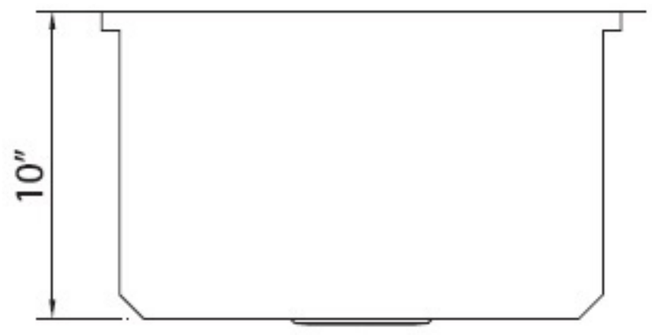

INSTALLATION PROFILE*

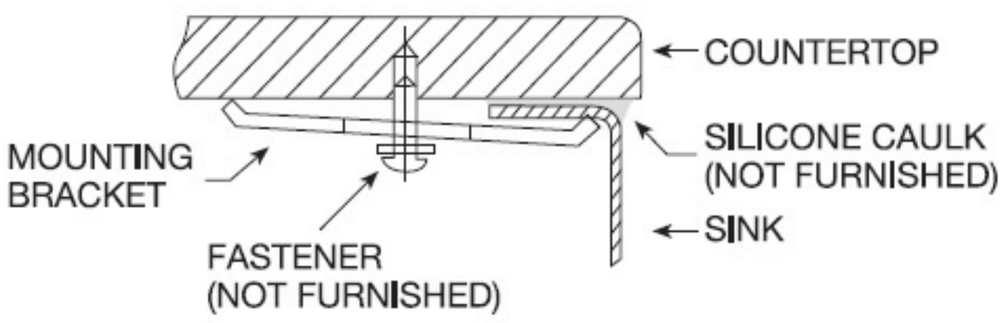

*Template and countertop mounting clips are packed with every sink

nqa. ISO 9001 Registered
UKAS QUALITY MANAGEMENT 015

These sinks comply with ASME A112.19.3
These sinks are listed by the International Association of Plumbing and Mechanical Officials as meeting the requirements of the Uniform Plumbing Code.

Ukinox reserves the right to change product specifications without notice.

Printed in USA © 2011 Ukinox

Ukinox USA Inc. 5601 Powerline Rd. Ft.Lauderdale,FL 33309
www.ukinox.com