COASTER® FINE FURNITURE

100172

ARM CHAIR

ASSEMBLY INSTRUCTION
COASTER FINE FURNITURE

www.coastercompany.com

Assembly Instruction

ASSEMBLY TIPS:

1.Remove hardware from box and sort by size.

2.Please check to see that all hardware and parts are present prior to start of assembly.

3.Please follow attached instructions in the same sequence as numbered to assure fast & easy assembly.

Warning !

1. Don't attempt to repair or modify parts that are broken or defective .Please contact the store immediately.
2. This product is for home use only and not intended for commercial establishment.

PARTS IDENTIFICATION:

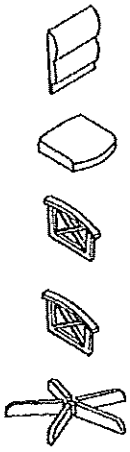

A	BACKREST	1 PCS
B	SEAT	1 PCS
C	LEFT ARMREST	1 PCS
D	RIGHT ARMREST	1 PCS
E	BASE	1 PCS
F	CASTER	5 PCS
G	SEAT PLATE	1 PCS
H	WOODEN COVER	1 PCS
I	SUPPORTING BAR	1 PCS

Z HARDWARE PACKAGE

NO	DESCRIPTION	FIGURE	Q'TY
1	55mm BOLT A		2 PCS
2	45mm BOLT B		3 PCS
3	40mm BOLT C		4 PCS
4	25mm BOLT D		4 PCS
5	METAL WASHER		11 PCS
6	ALLEN WRENCH		1 PC
7	GLUE		1 PC
8	WOODEN PLUG		2 PCS

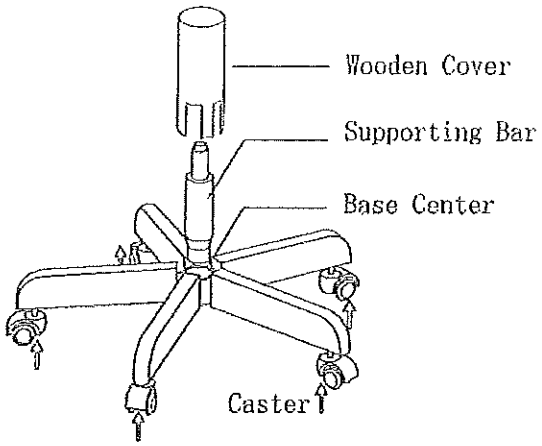

Step 1: Insert the casters into the base. Then insert the supporting bar into the base center with a plastic hammer, and the wooden cover through the supporting bar.

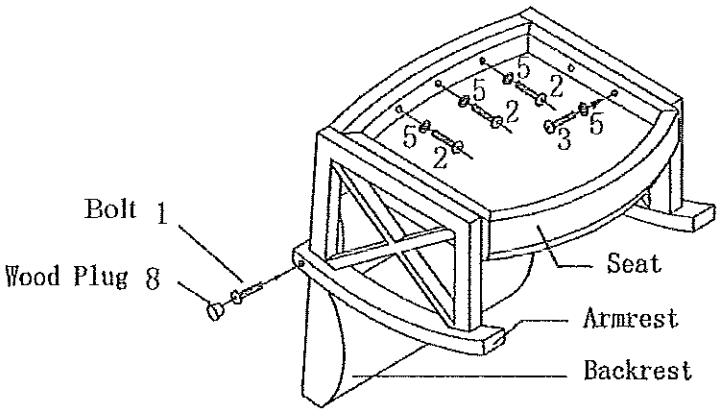

Step 2: Attach the backrest first, and then armrests to the seat with washers and Bolts. seal the holes with glues and wood plugs.

Step 3: Attach the seat plate to the seat frame with Bolt(4)and washer(5). (The knob on the seat plate facing forwards)

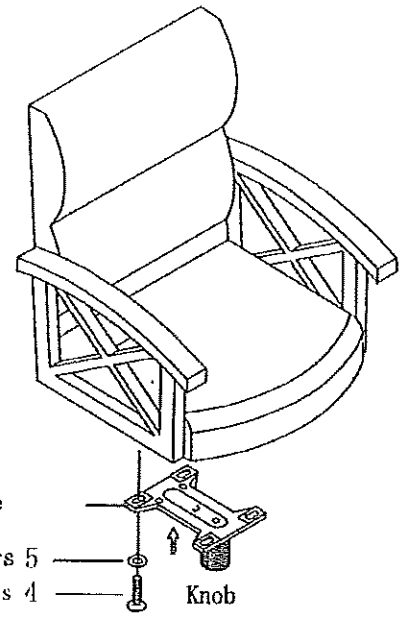

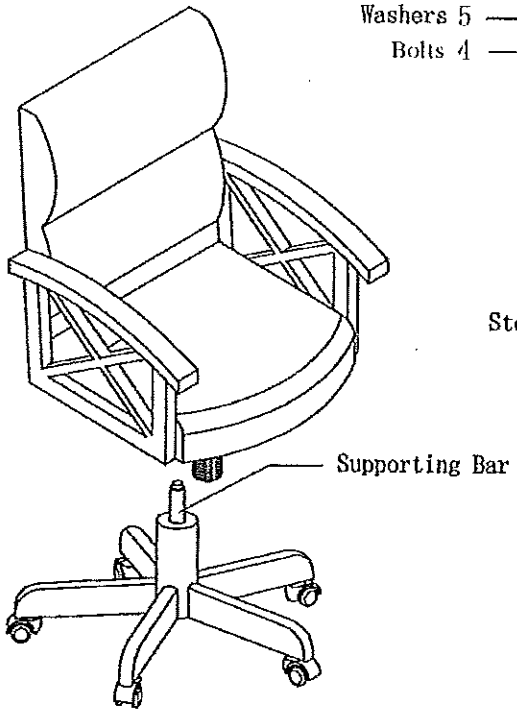

Step4: Place the seat onto the supporting bar through the hole below.