COASTER® FINE FURNITURE

701077

DARK WALNUT END TABLE

ASSEMBLY INSTRUCTION
COASTER FINE FURNITURE

www.coastercompany.com

Assembly Instruction

ASSEMBLY TIPS:

1.Remove hardware from box and sort by size.
2.Please check to see that all hardware and parts are present prior start of assembly.
3.Please follow attached instructions in the same sequence as numbered to assure fast & easy assembly.

⚠Warning!
1.Don't attempt to repair or modify parts that are broken or defective.please contact the store immediately.
2.This product is for home use only and not intended for commercial establishment.

PARTS IDENTIFICATION

(1)	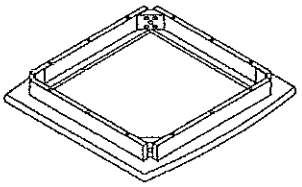	TOP PEDESTAL	1PC
(2)	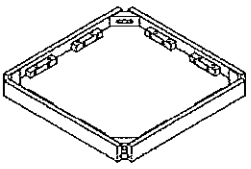	BOTTOM PEDESTAL	1PC
(3)	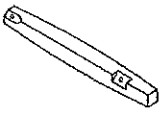	LEG	4PCS

HARDWARE IDENTIFICATION

A	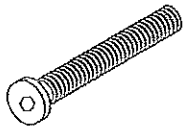	Bolt	∅5/16X2″	8PCS
B		Flat Washer	∅5/16	8PCS
C		Spring Wrench	∅5/16X19mm	8PCS
D	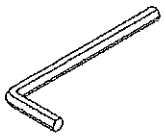	Allen Wrench	4mm	1PC

STEP 1

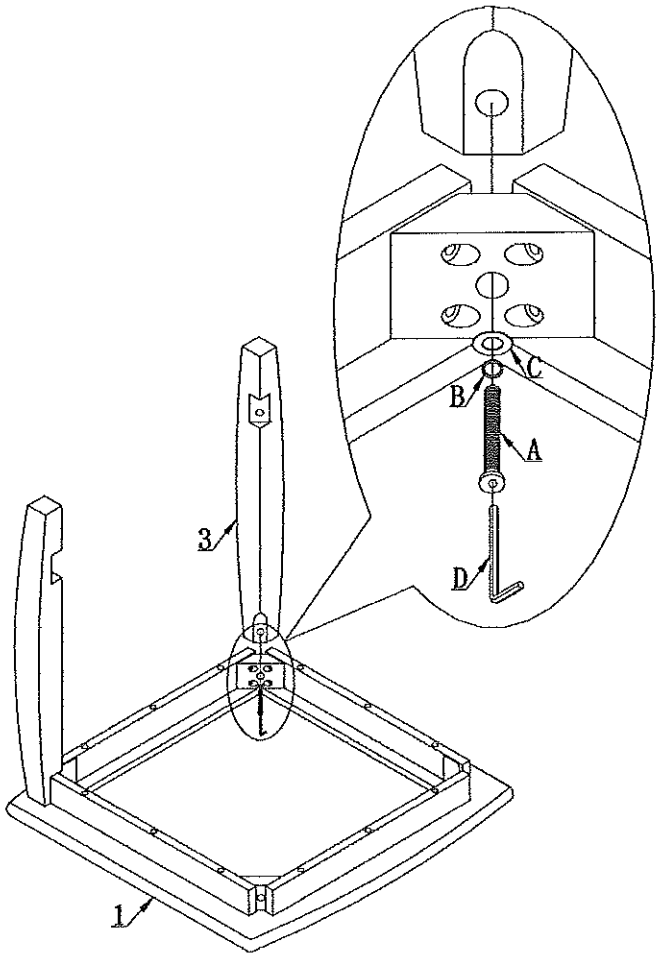

STEP 2

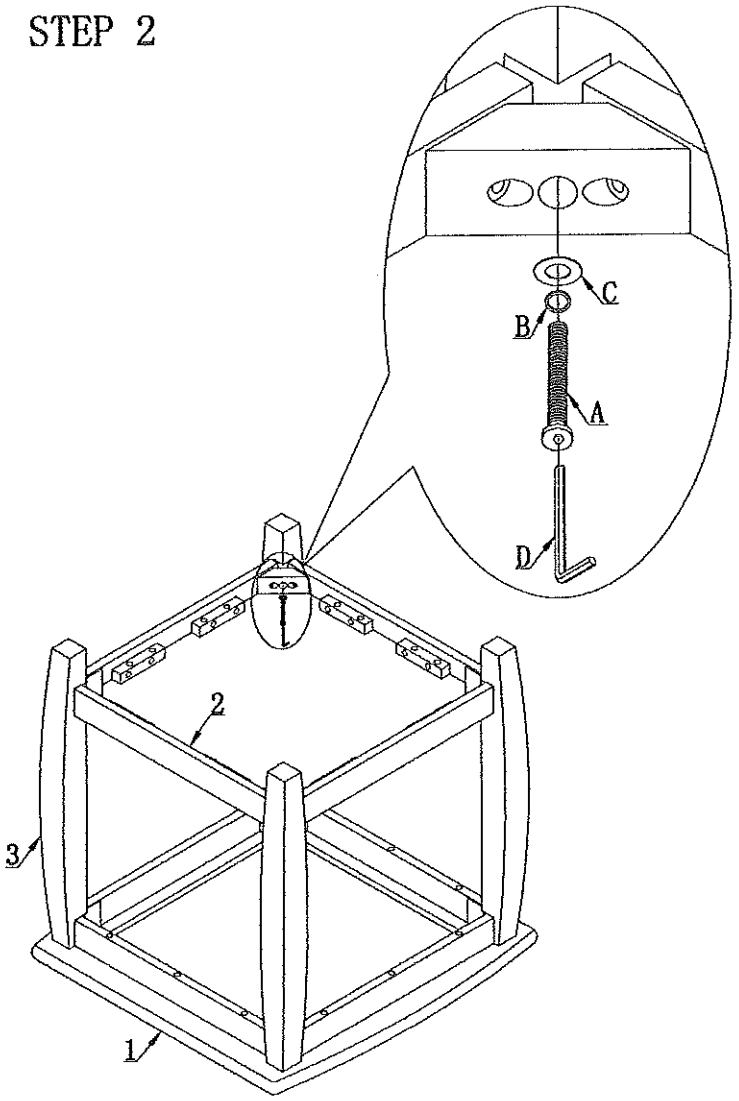
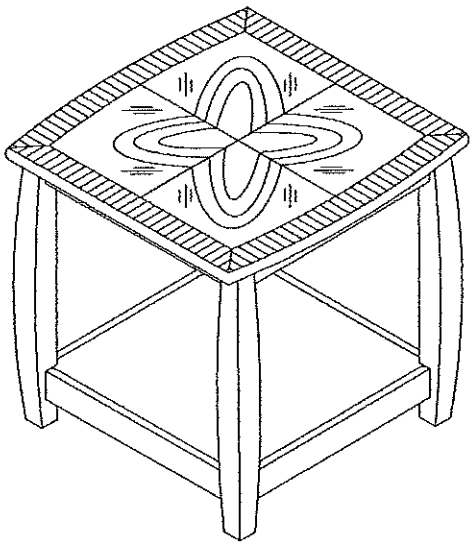
STEP 3