COASTER®
Fine Furniture

650010

Glider & Ottoman

ASSEMBLY INSTRUCTION

COASTER FINE FURNITURE

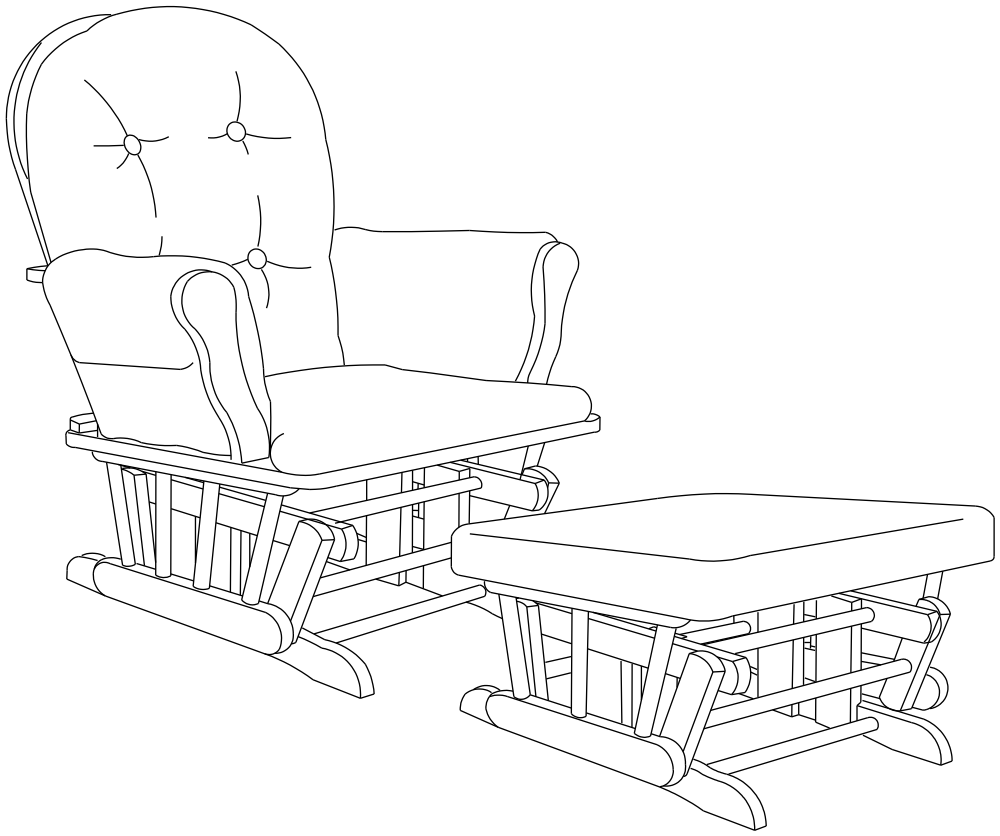

www.coastercompany.com

ASSEMBLY INSTRUCTION

ASSEMBLY TIPS:
1.Remove hardware from box and sort by size.
2.Please check to see that all hardware and parts are present prior start of assembly.
3.Please follow attached instruction in the same sequence as numbered to assure fast & easy assembly.

⚠ Warning !
1.Don't attempt to repair or modify parts that are broken or defective. Please contact the store immediately.
2.This product is for home use only and not intended for commercial establishment.

PARTS IDENTIFICATION

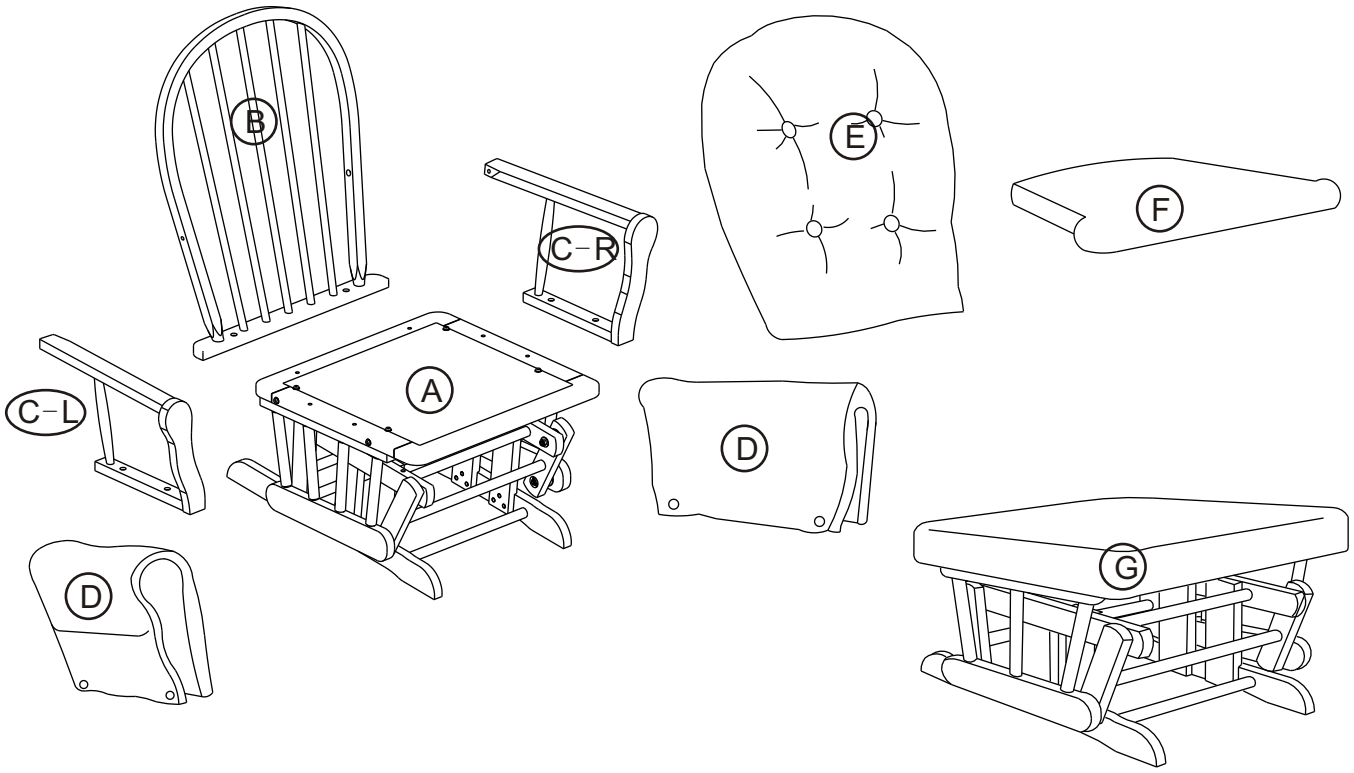

A	Base	1pc
B	Back Frame	1pc
C-L	Leftside armrest	1pc
C-R	Rightside armrest	1pc
D	Arm cushion	2pcs
E	Back cushion	1pc
F	Seat cushion	1pc
G	Ottoman	1pc

H	1/4" x 1-3/4" Bolts	2pcs
I	1/4" x 1-1/2" Bolts	6pcs
J	1/4" Spring washer	8pcs
K	Barrel nuts	2pcs
L	Allen key	1pc

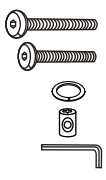

Step 1

1. 1 Attach the back frame (B) to the base (A) using bolts (I) and spring washers (J). Use Allen key (L) to fasten bolts.

Note: Leave bolts loose to allow easlier assembly of arms in following steps.

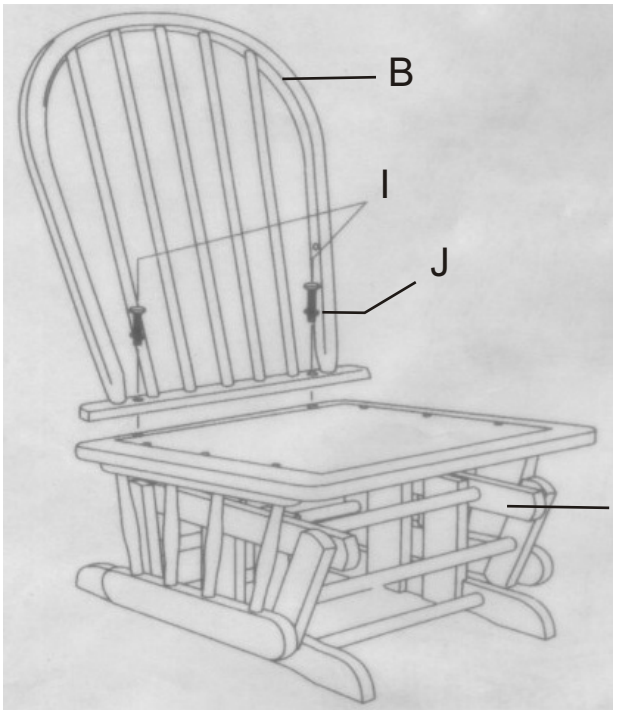

Step 2

2. 1 Attach the left arm assembly (C-L) to the back frame (B) using bolt (H),spring washer (J) and barrel nut (K). Insert the armrest. Insert the bolt (H) with spring washer (J) through the hole in the backrest, and use Allen key (L) to fasten bolt.

Note: Do not fully tighten bolt as the holes on the bottom of the armrest must align with the holes on the base.

2.2 Attach the left arm assembly (C-L) to the base (A) using bolts (I) and spring washers (J). Use Allen key (L) to fasten bolts.

2.3 Repeat step 2.1 and 2.2 to assemble right arm assembly (C-R).

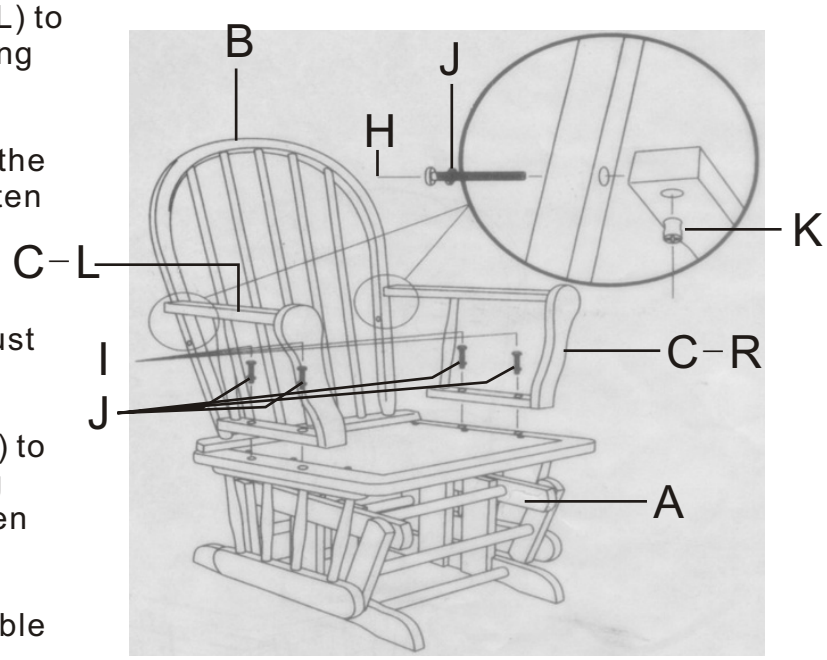

Step 3

3.1 Attach back cushion (E) to back.

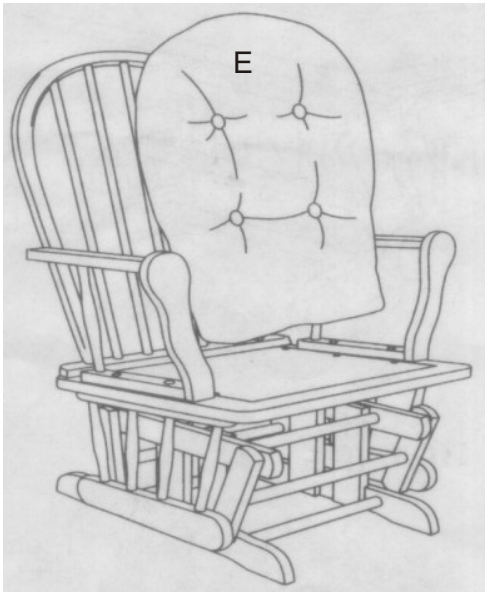

Step 4

4.1 Attach the arm cushions (D) to the armrest by buttoning the buttons along the armrest.

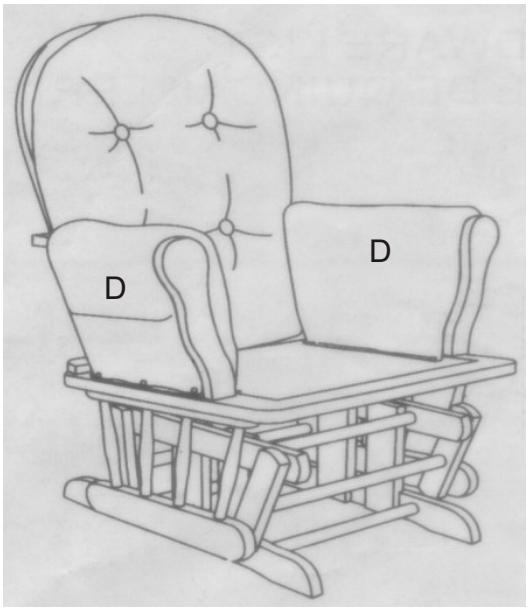

Step 5
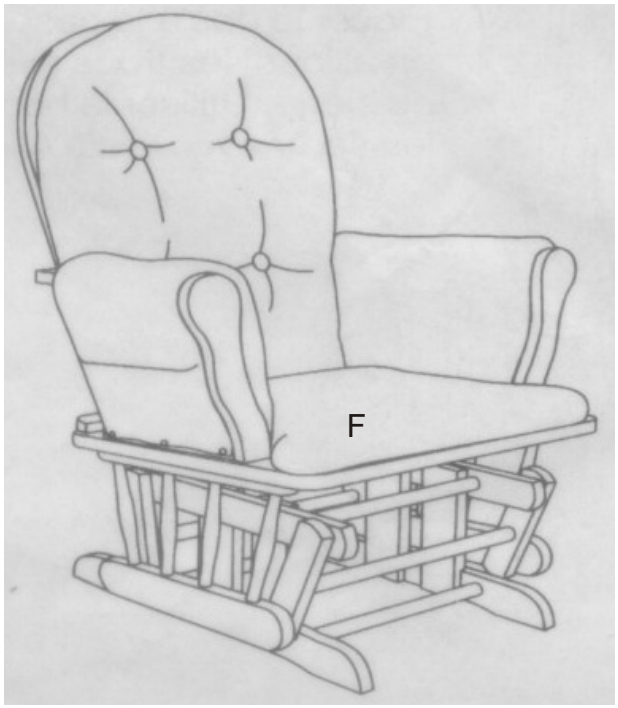
5.1 Attach seat cushion (F) to back.