QC

REV DATE: 06/11/201

SELECTION MADE SIMPLE.
www.americanheritagebilliards.com

ASSEMBLY INSTRUCTIONS

SANTOS STOOL

LOOSELY ATTACH EACH BOLT UNTIL FRAME IS ASSEMBLED THEN TIGHTEN WHEN COMPLETE

1

1) Attach the chair top to base by screwing the top to swivel plate using 4pcs cross head bolts (A) ,4pcs lock washers (B) and 4pcs flat washers (C) as shown .Tighten all bolts evenly and then turn each bolts 1/4 turn evenly for final fasten .

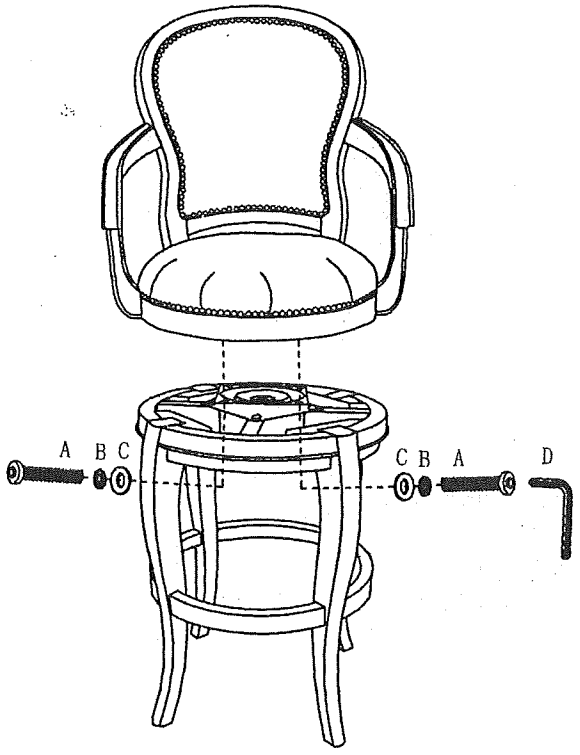

2

2)Assembly is complete.

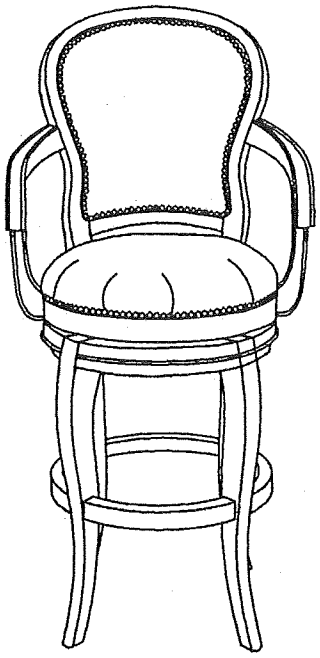

MADE IN CHINA

HARDWARE PACK

CHECK THAT THE FOLLOWING PARTS ARE IN CARTON

A	B	C	D
Cross head bolt 1/4"*1 1/4"L 4PCS	Lock washer 1/4" 4PCS	Flat washer ø16*1.2mm 4PCS	ALLEN WRENCH