REV DATE:11/11/2012

EST. 1987

AHB

HOME FURNITURE COLLECTIONS

ASSEMBLY INSTRUCTIONS
CICERO PUB TABLE

LOOSELY ATTACH EACH SCREW UNTIL FRAME IS ASSEMBLED THEN TIGHTEN WHEN COMPLETE

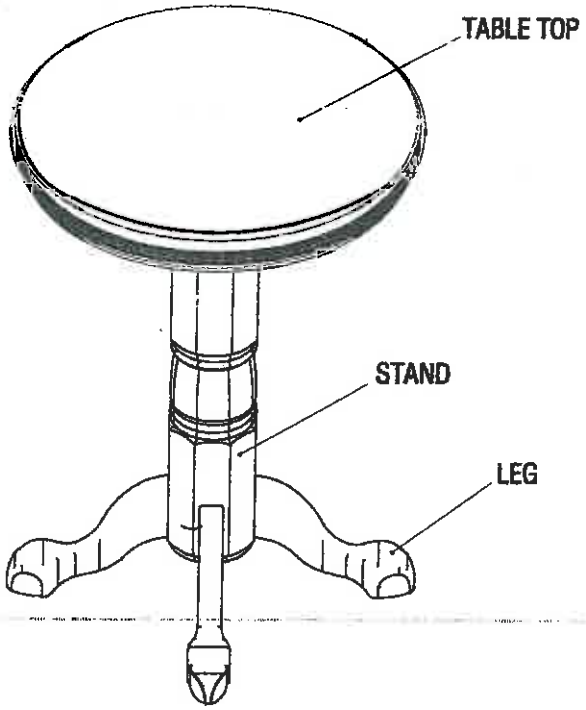

	HARDWARE LIST	QTY	OUTLOOK
A	ALLEN KEY	1	
B	SMALL FLAT WASHER	4	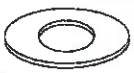
C	JCBCW BOLT	4	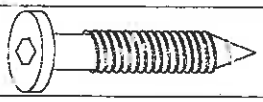
D	BASE GLIDE	4	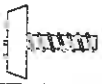
E	BIG FLAT WASHER	8	
F	BIG SPRING WASHER	8	
G	WING NUT	8	
H	OPEN-HEAD WRENCH	1	