ASSEMBLY INSTRUCTION
HALL TABLE WITH 2 DRAWERS

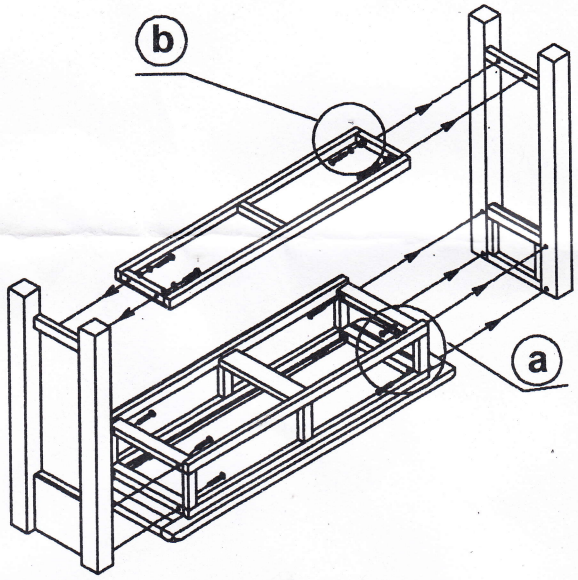

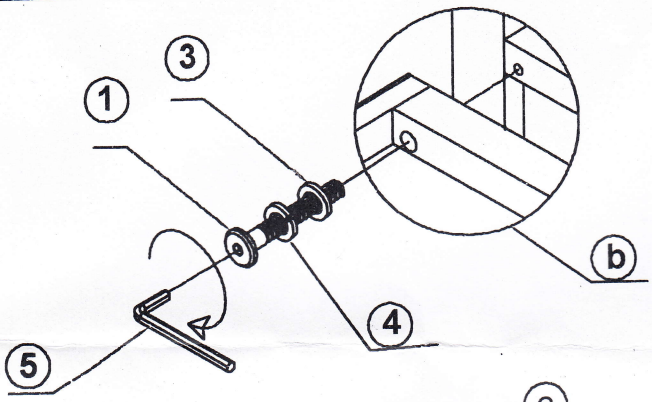

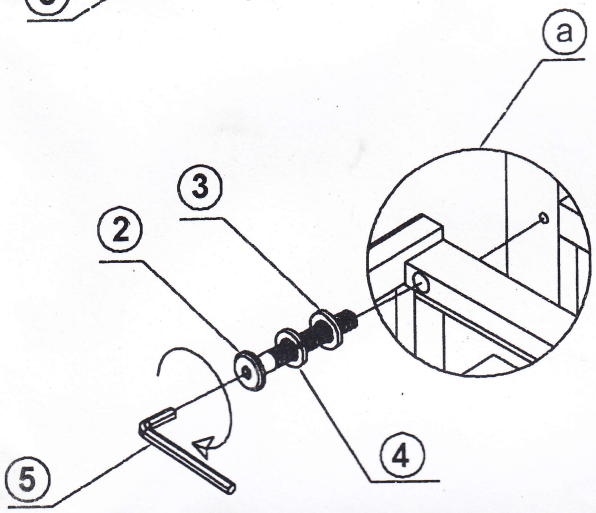

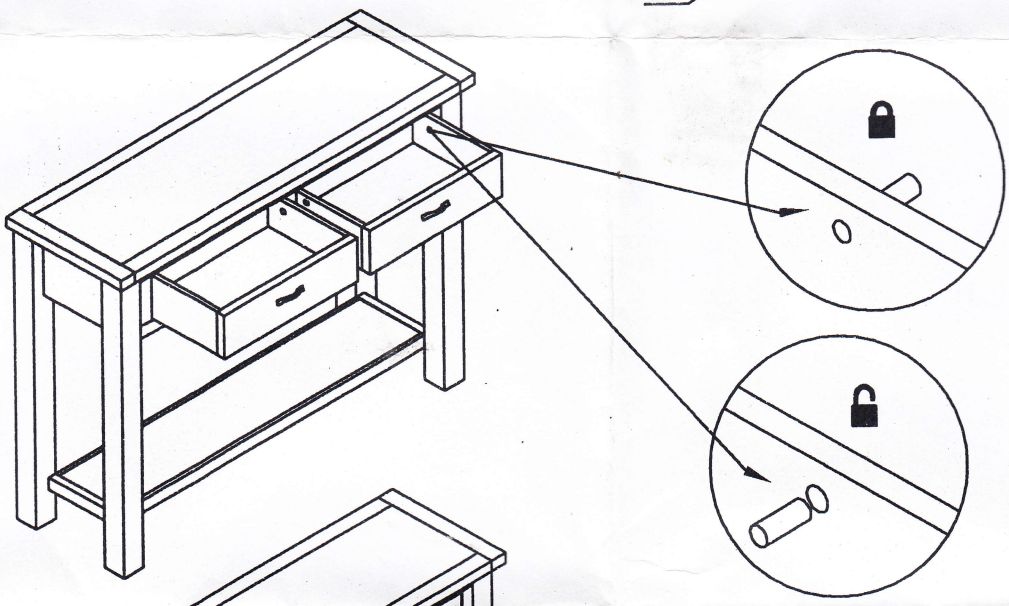

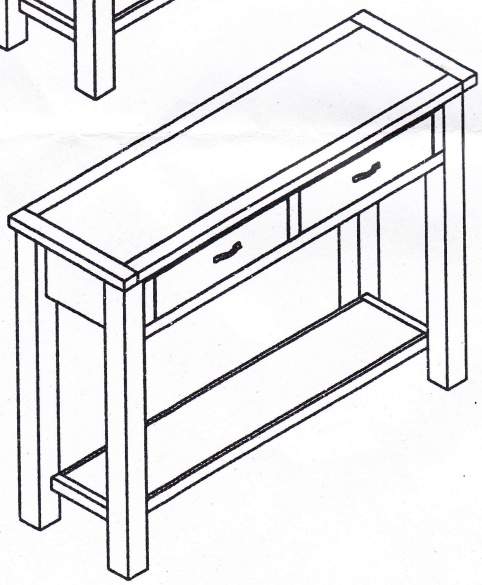

No	LIST OF HARDWER	Q.TY(pcs)
1	**BOLT M6x35**	4
2	**BOLT M6x45**	8
3	Flat Washer	12
4	Lock Washer	12
5	**ALLEN KEY 4**	1
6	**Wooden Dowel Ø10x30**	4