English

COMPUTER TABLE

ASSEMBLY INSTRUCTION

Thanks for purchasing one of our products,please read carefully the assembly instructions before the installation(Attention:Do not tighten the screws before all screws are in place)

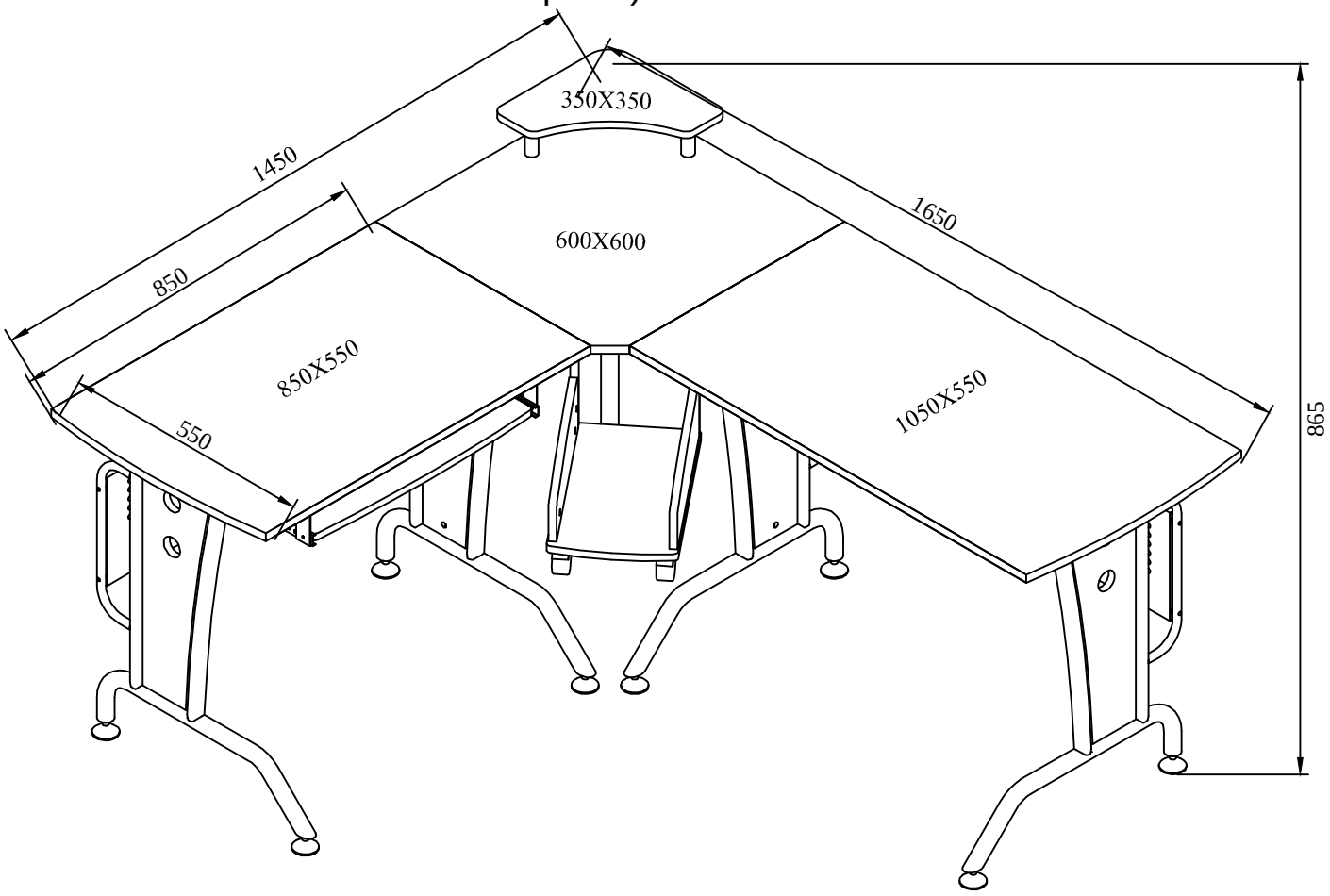

Model 20055

General Care:

-Keep your furniture out direct sunlight-Use desk pads and coasters to protect the surface from dents,scratches,and moisture from hot or cold liquids.

Cleaning:

-For cleaning,wipe the surface with a damp(not wet)cloth or wipe dry with a clean lint free cotton cloth.

-Window cleaning liquid or a similar cleaning liquid can be used to clean glass surface.

20055

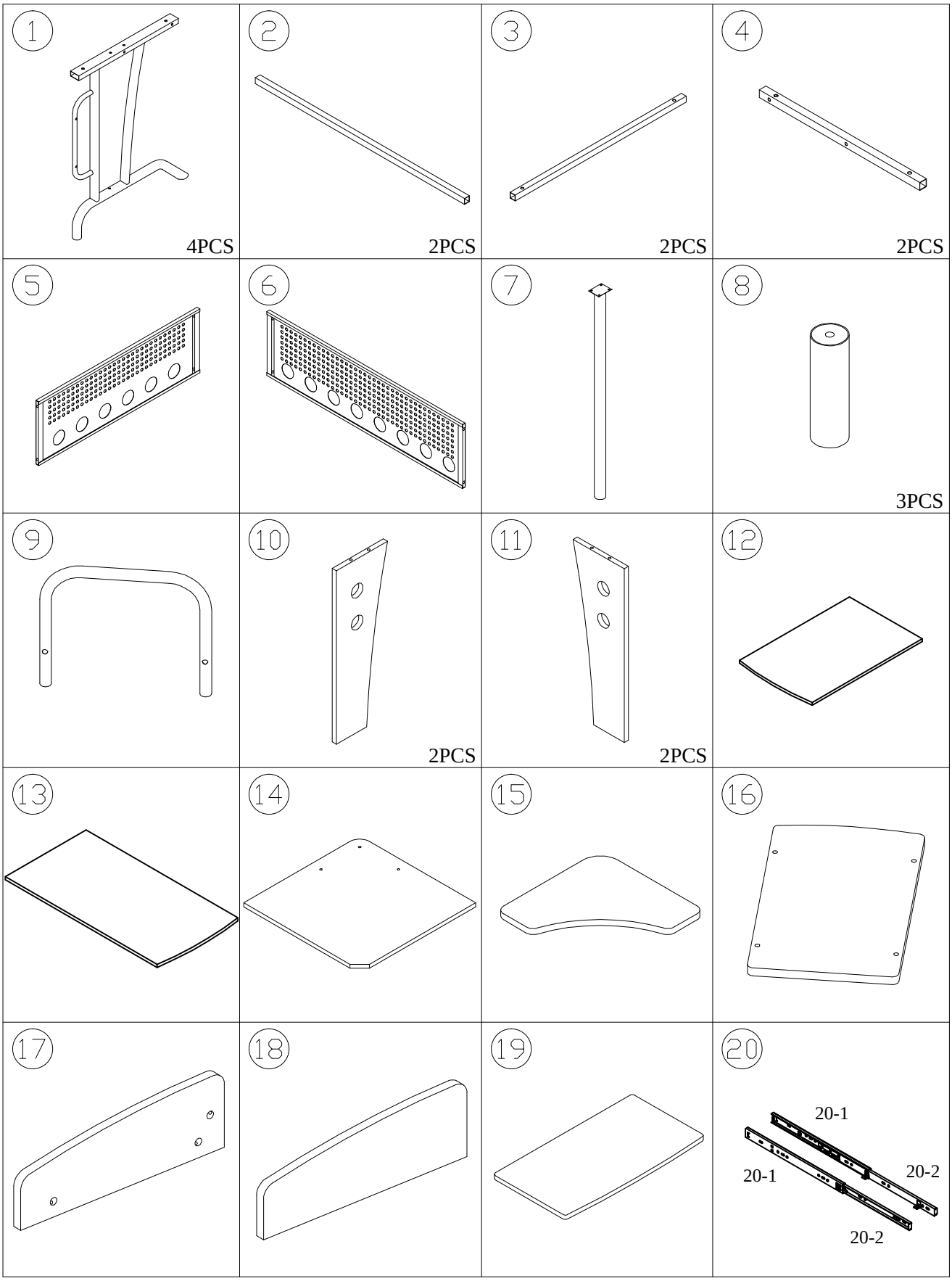
1
4PCS
2
2PCS
3
2PCS
4
2PCS
5
6
7
8
3PCS
9
10
2PCS
11
2PCS
12
13
14
15
16
17
18
19
20
20-1
20-1
20-2
20-2

20055

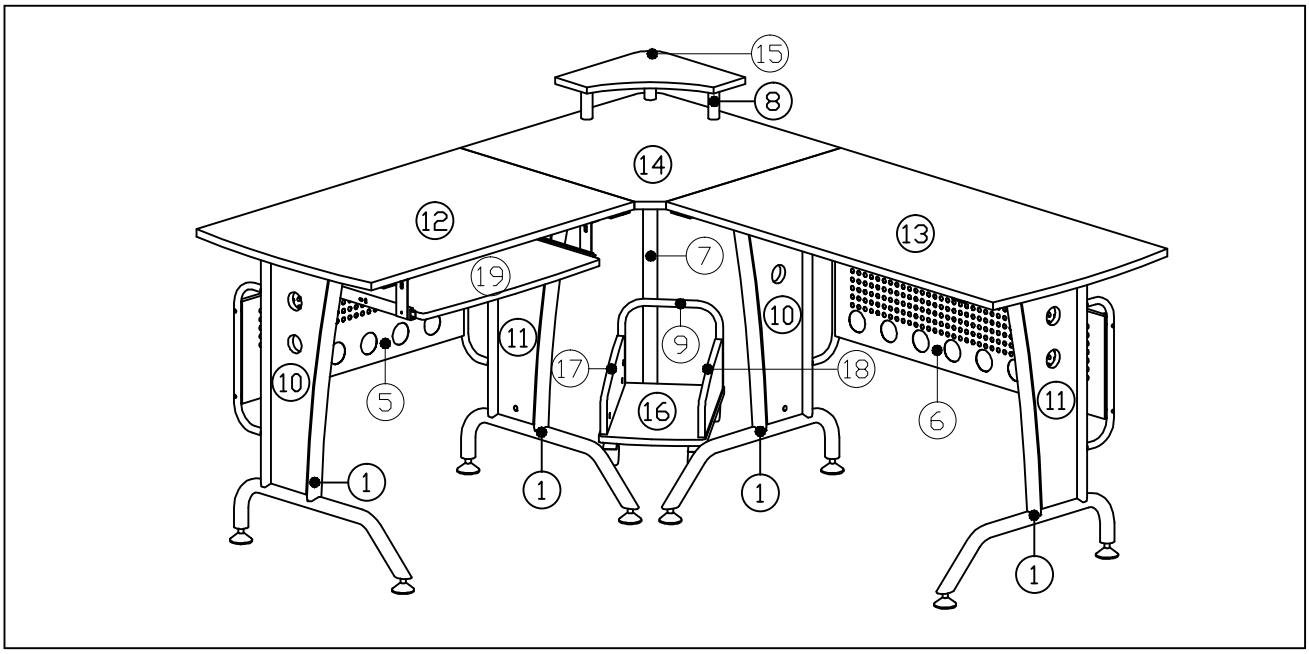

PART	QTY.	ITEM	
A	4	M5X70	
B	14	M5X55	
C	3	M6X20	
D	4	M6X80	
E	4	M6X60	
F	8	M6X40	
G	19	M6X30	

PART	QTY.	ITEM	
H	4	M4X6	
I	24	M3.5X14	
J	12	M6	
K	4		
L	4		
M	9	M8	
N	1		
O	1		

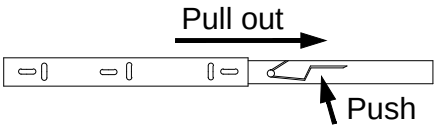

Disconnect the keyboard rail with the BLACK PLASTIC PART.It needs to be pulled down to disconnect the runners.

6X34mm bolt installation as below

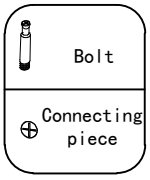

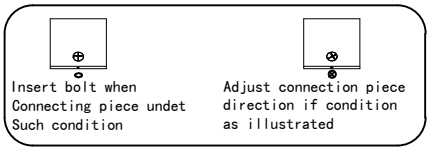

STEPA. 1

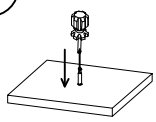

STEPA. 2

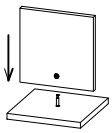

STEPA. 3

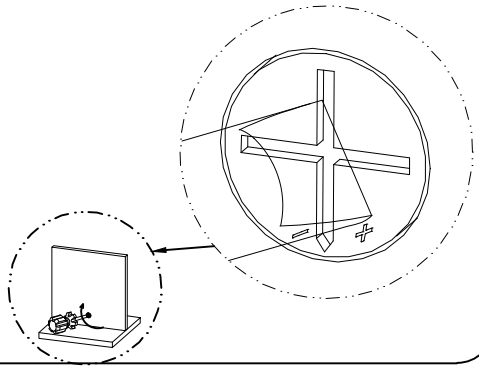

20055

1

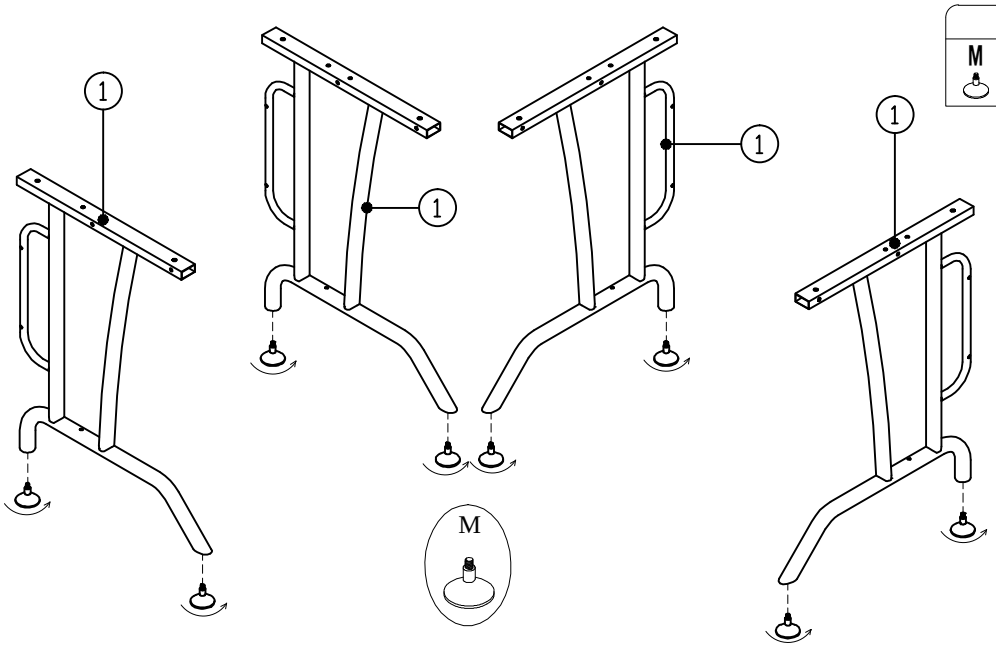

. SCREWS		
M	M8	8 PCS

2

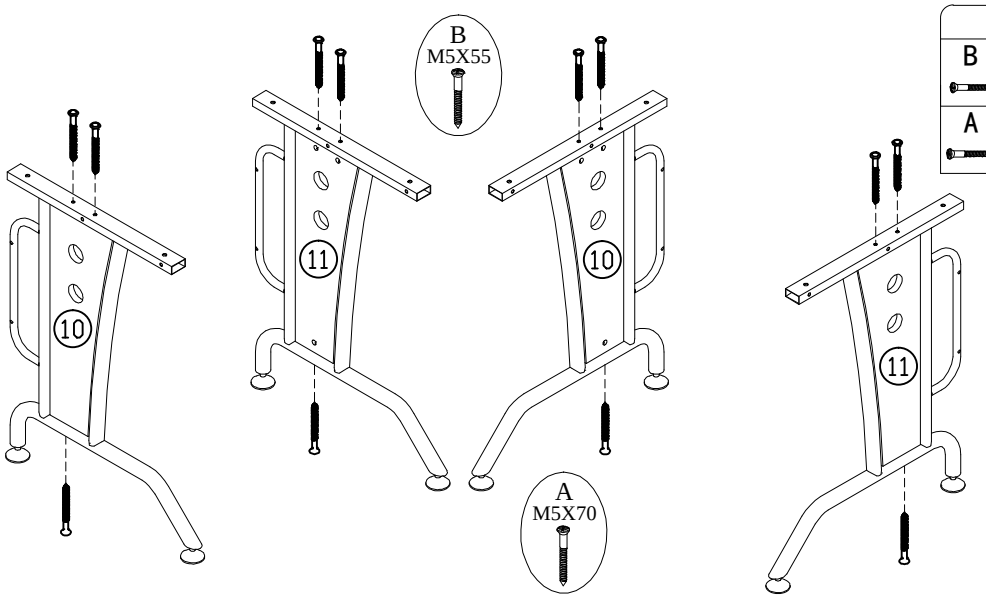

. SCREWS		
B	M5X55	8 PCS
A	M5X70	4 PCS

3

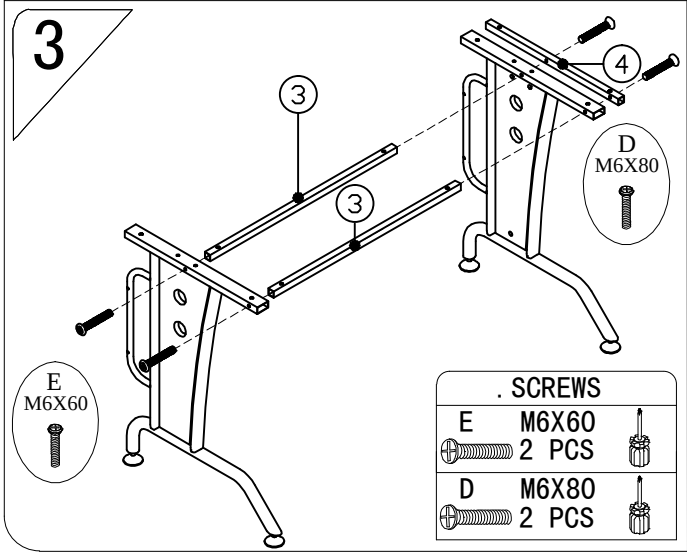

. SCREWS		
E	M6X60	2 PCS
D	M6X80	2 PCS

4

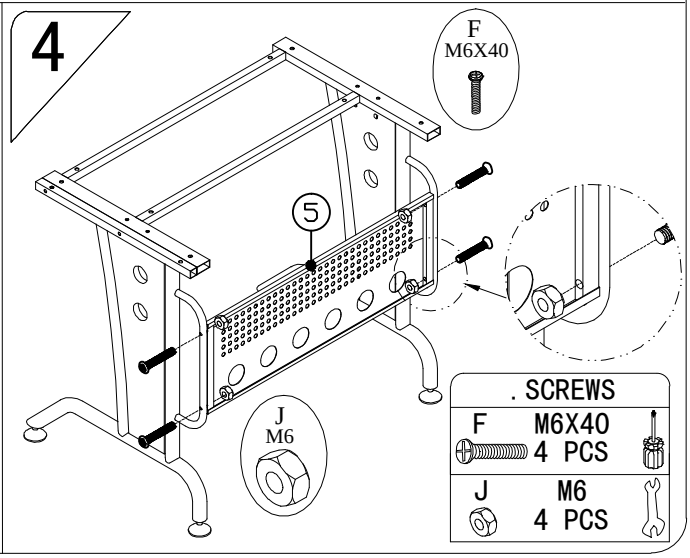

. SCREWS		
F	M6X40	4 PCS
J	M6	4 PCS

20055

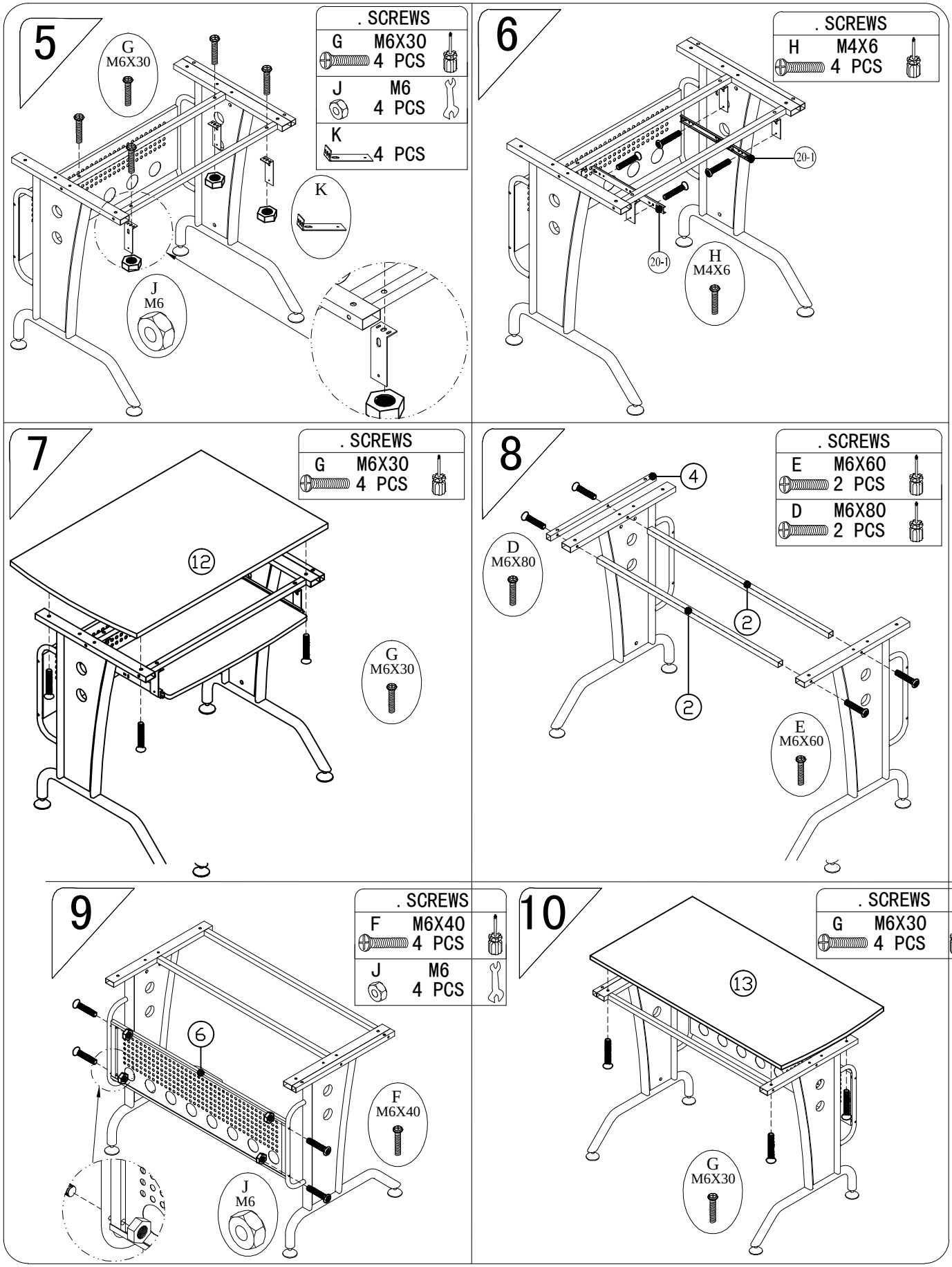
5
. SCREWS
G M6X30 4 PCS
J M6 4 PCS
K 4 PCS
G M6X30
K
J M6
6
. SCREWS
H M4X6 4 PCS
20-1
20-1
H M4X6
7
. SCREWS
G M6X30 4 PCS
12
G M6X30
8
. SCREWS
E M6X60 2 PCS
D M6X80 2 PCS
4
D M6X80
2
2
E M6X60
9
. SCREWS
F M6X40 4 PCS
J M6 4 PCS
6
F M6X40
J M6
10
. SCREWS
G M6X30 4 PCS
13
G M6X30

20055

11

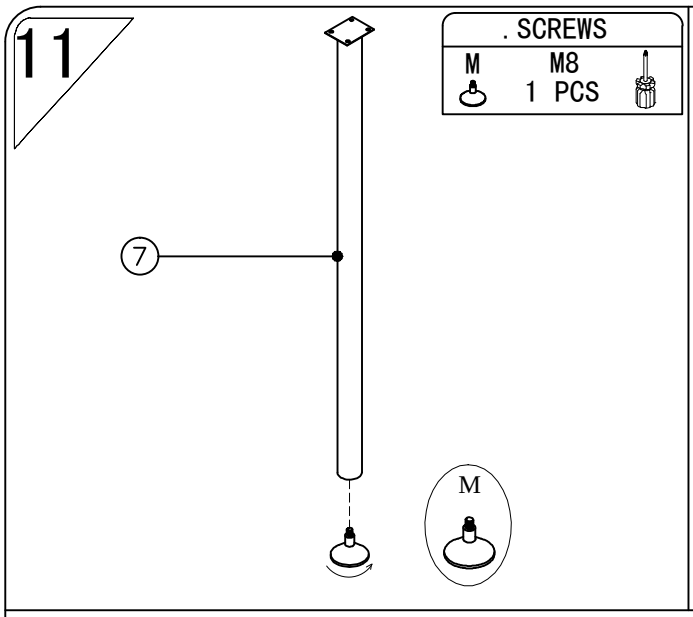

12

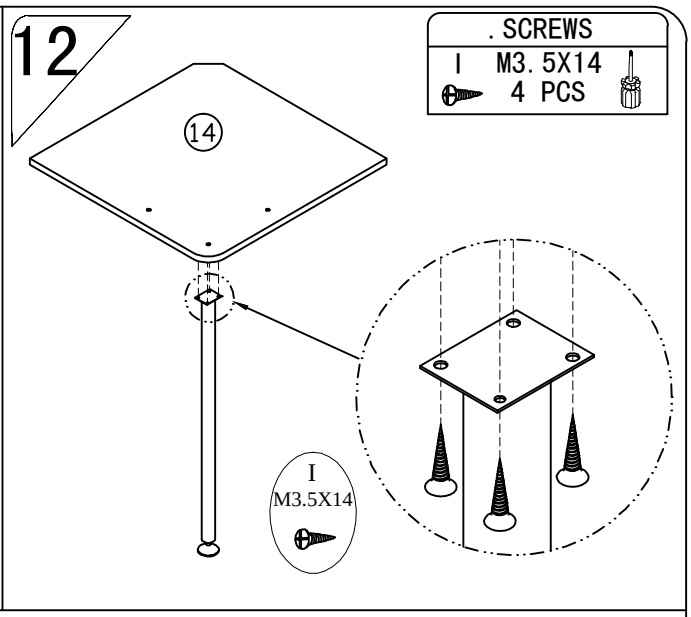

13

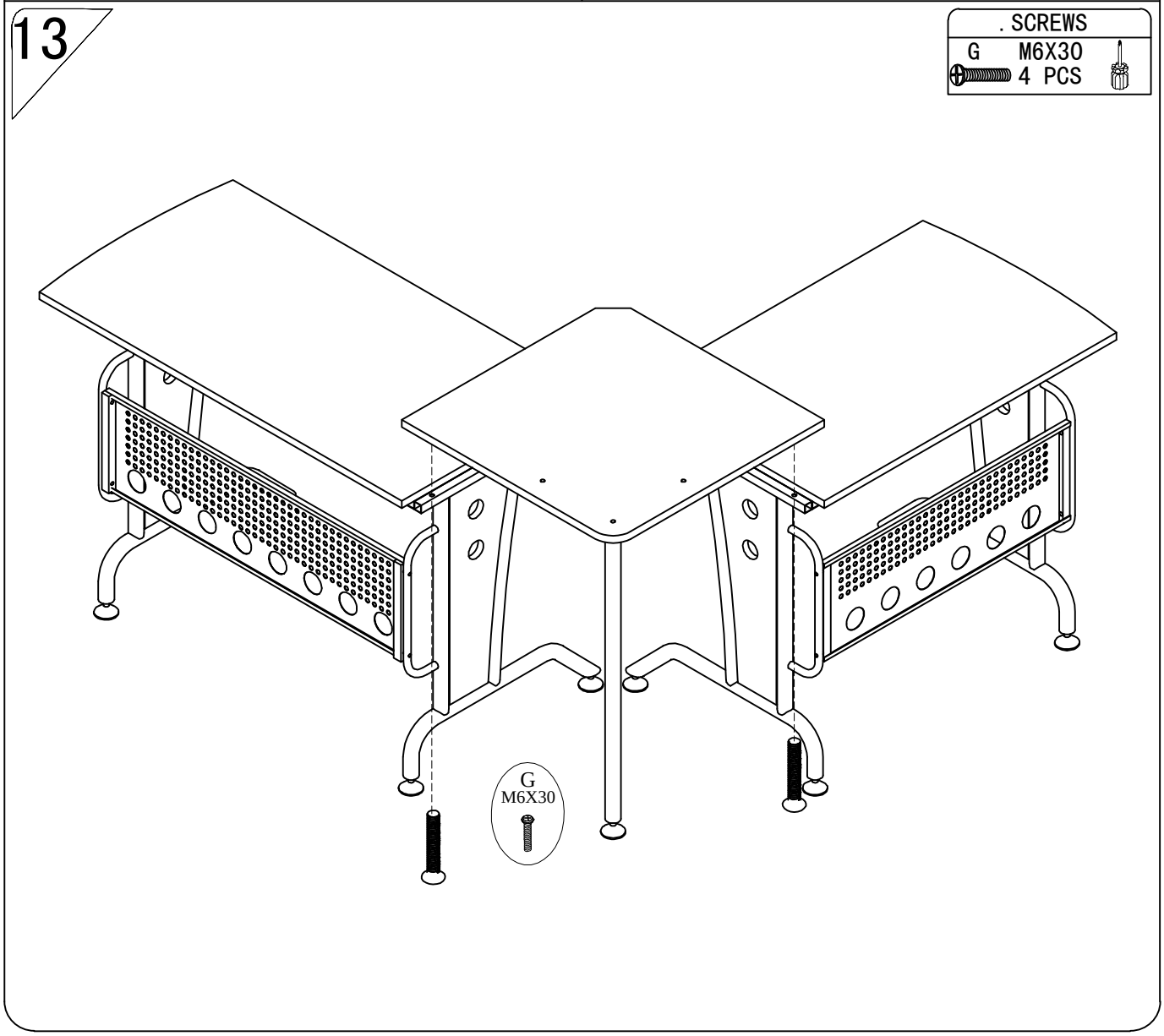

20055

14

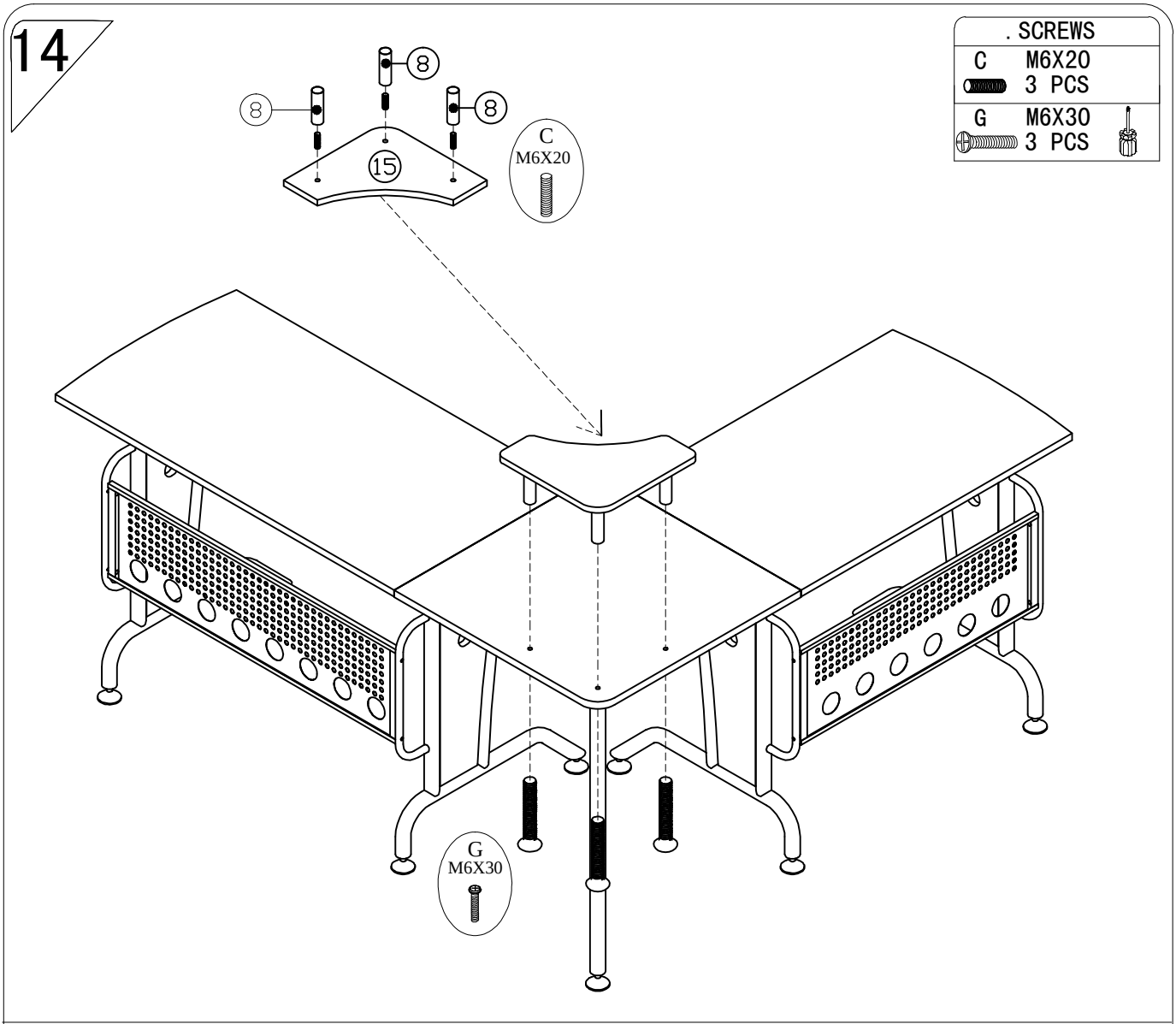

15

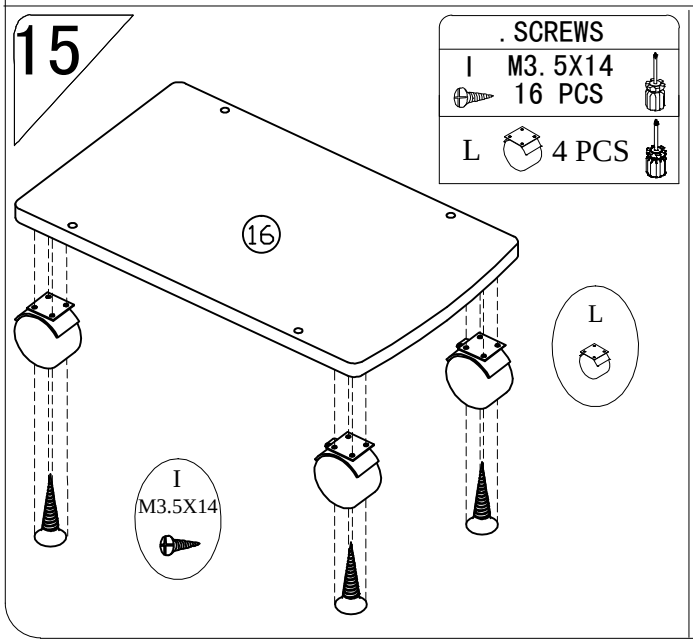

16

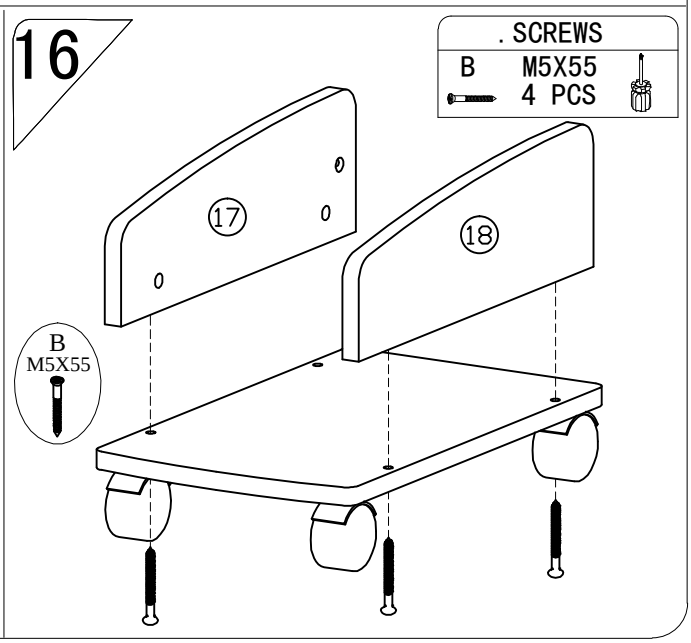

20055

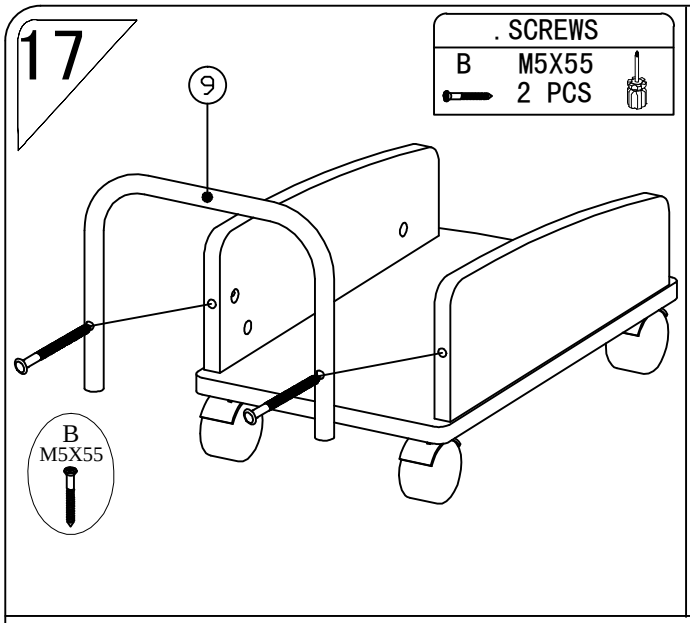
17
. SCREWS
B M5X55
2 PCS
9
B
M5X55

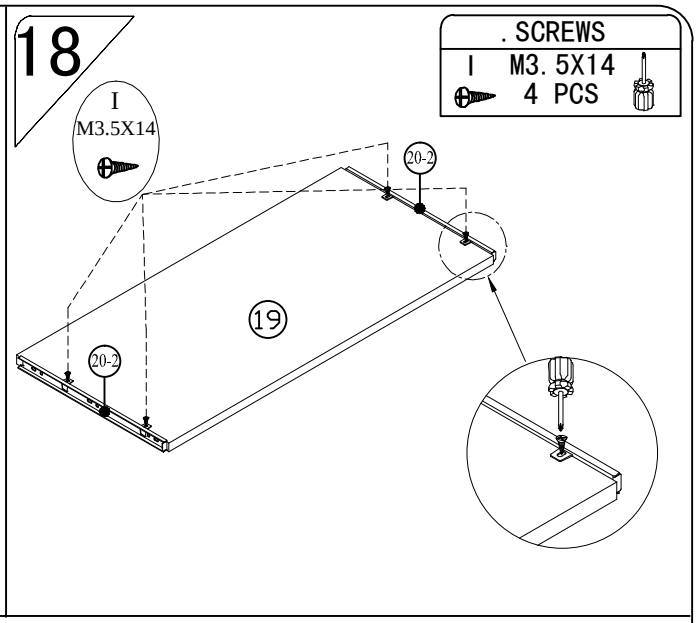
18
. SCREWS
I M3. 5X14
4 PCS
I
M3.5X14
20-2
19
20-2

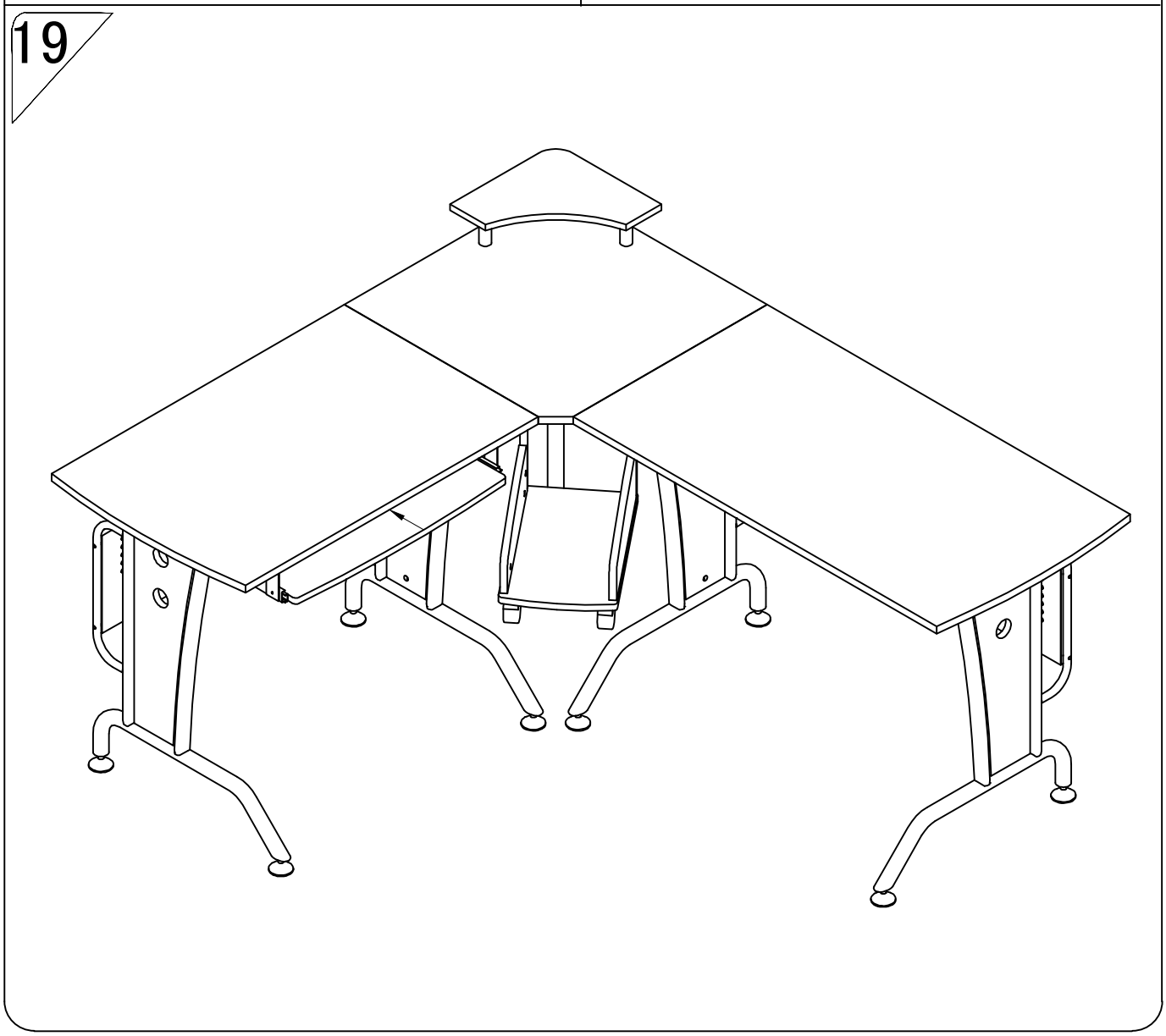
19