ASSEMBLY INSTRUCTIONS

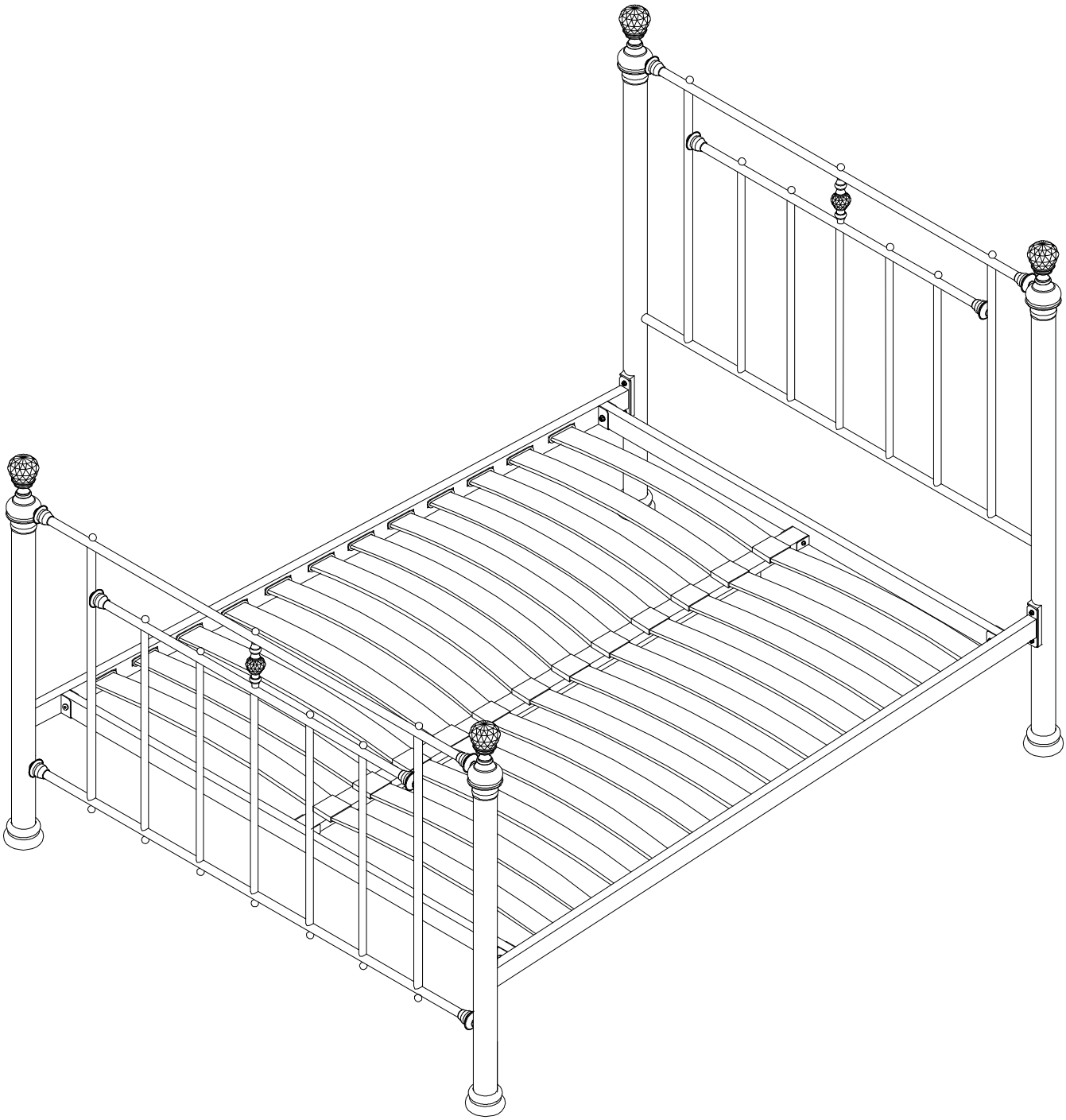

CARE INSTRUCTIONS

- Wipe clean using a soft damp cloth followed by a dry cloth.
- Do not use abrasives or cleaning products which may contain ammonia or solvents.
- Take care when handling or moving the furniture. Careless handling can damage furniture, try to lift rather than drag.

PARTS LIST

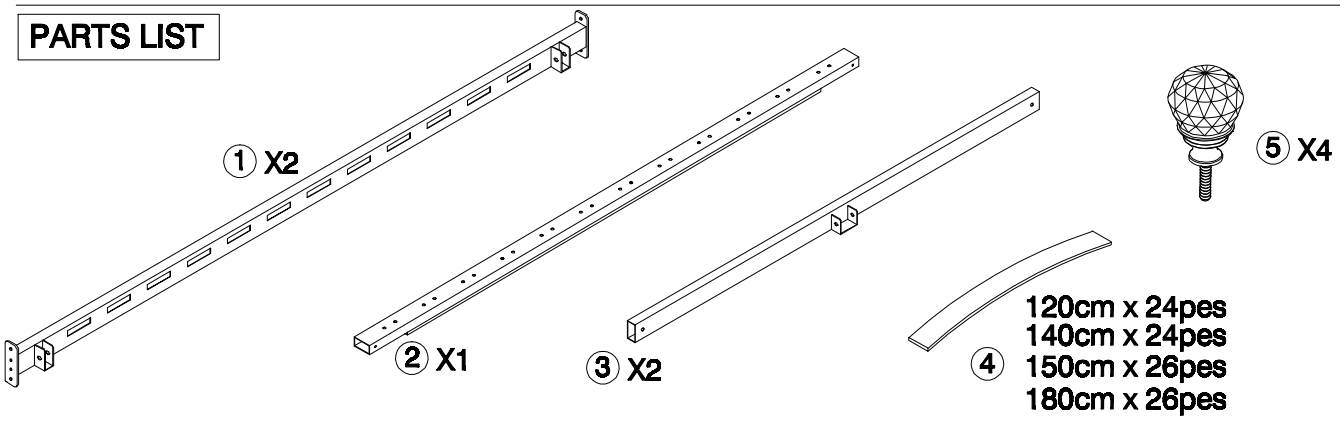

HARDWARE LIST

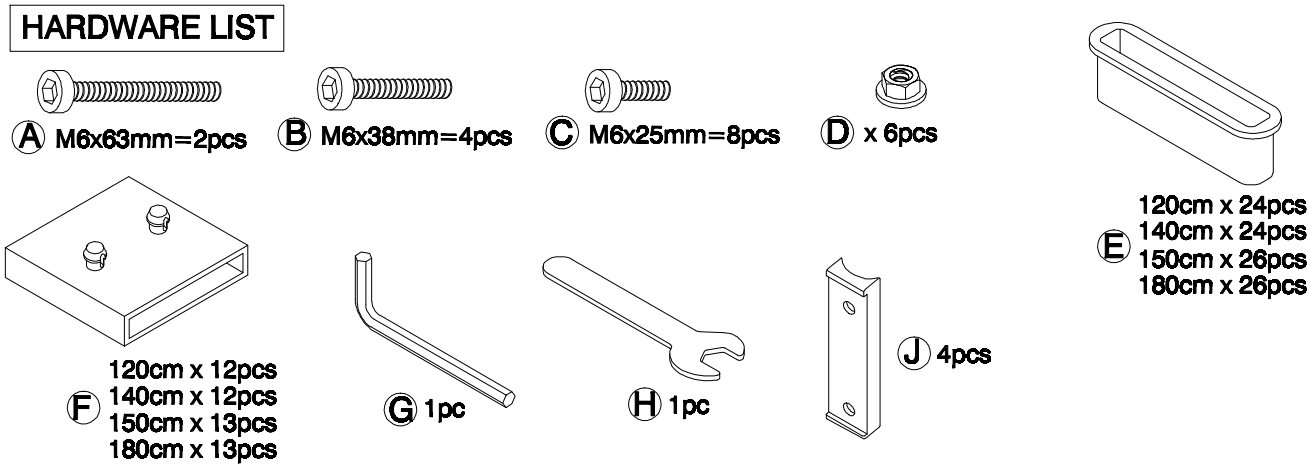

STEP1.

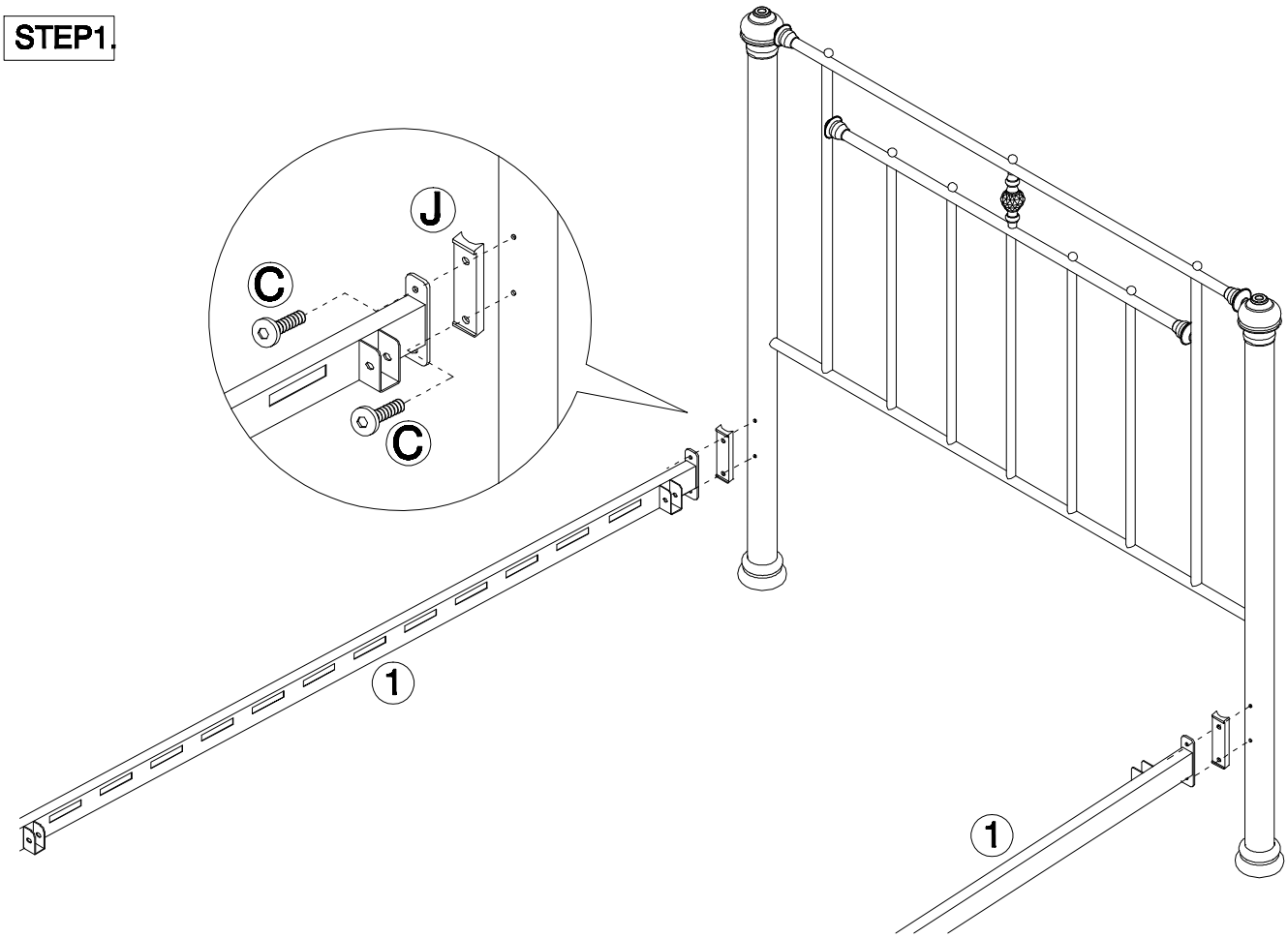

STEP2.

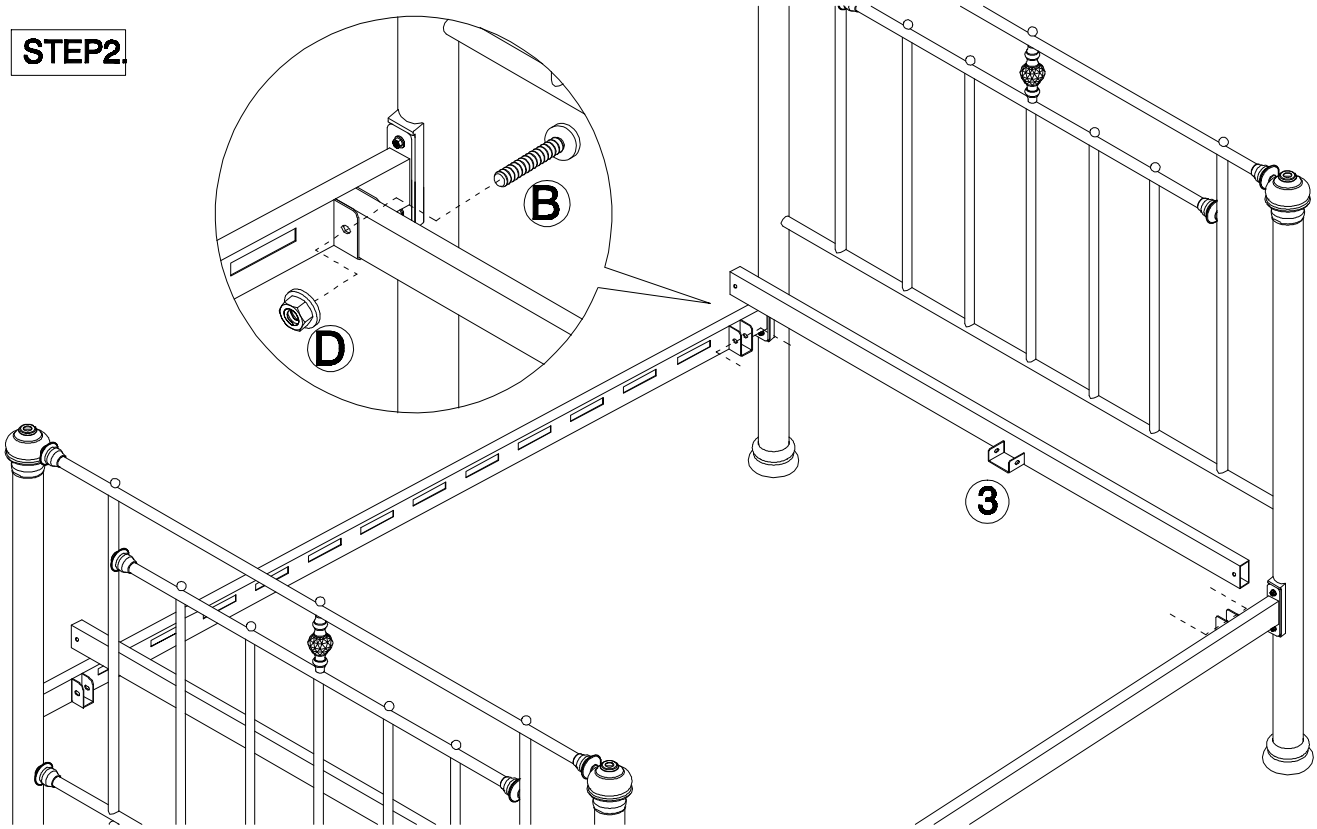

STEP3.

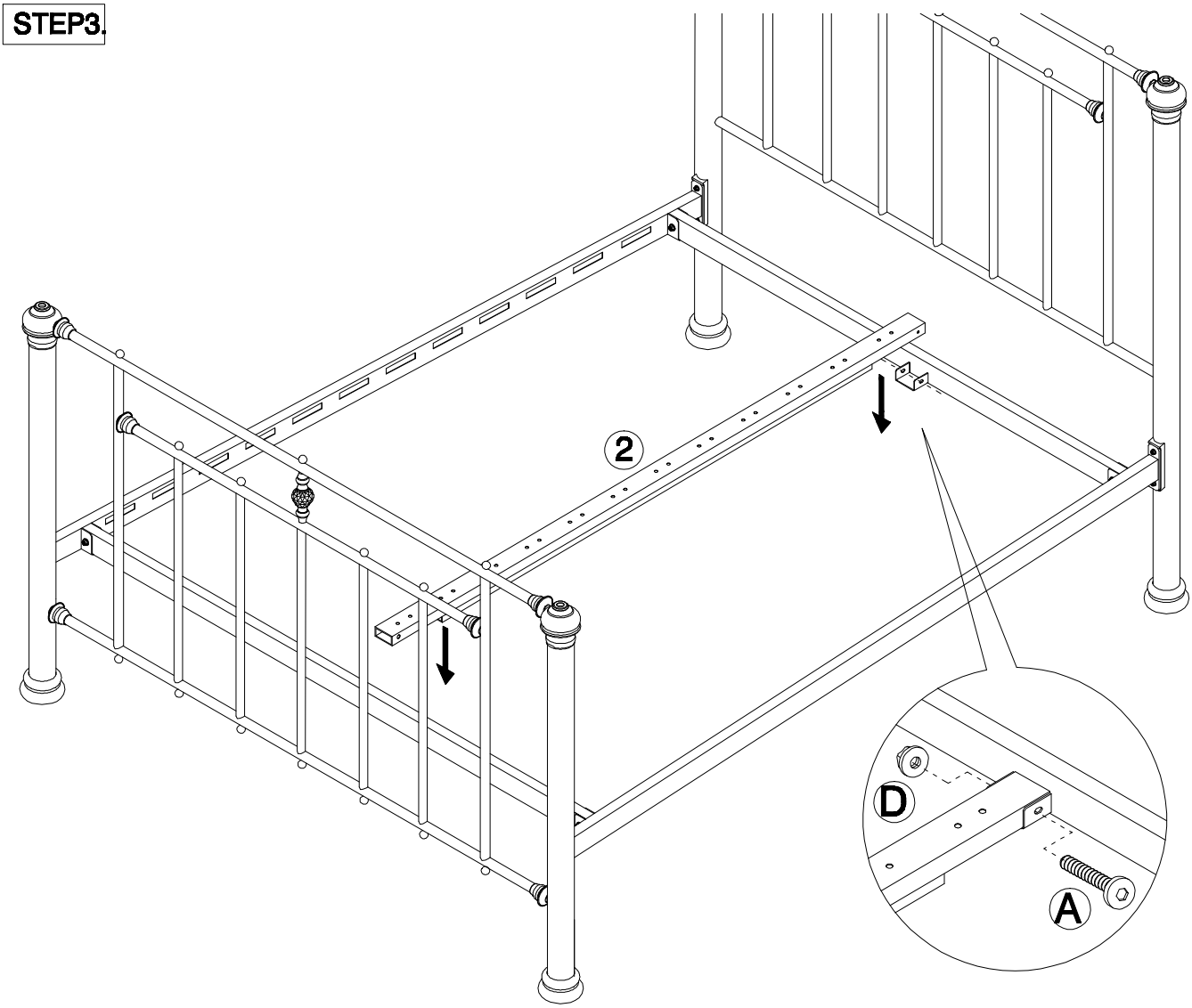

STEP4.

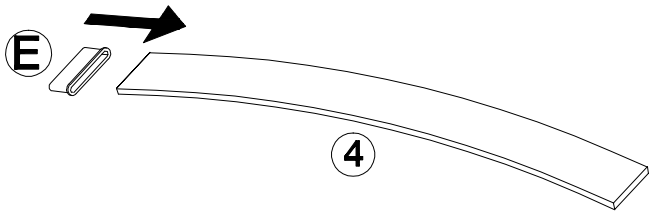

STEP5.

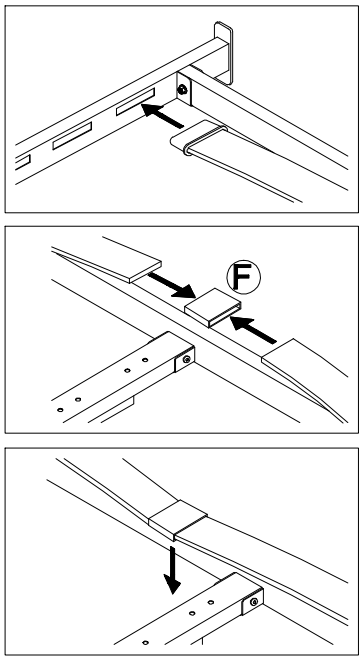

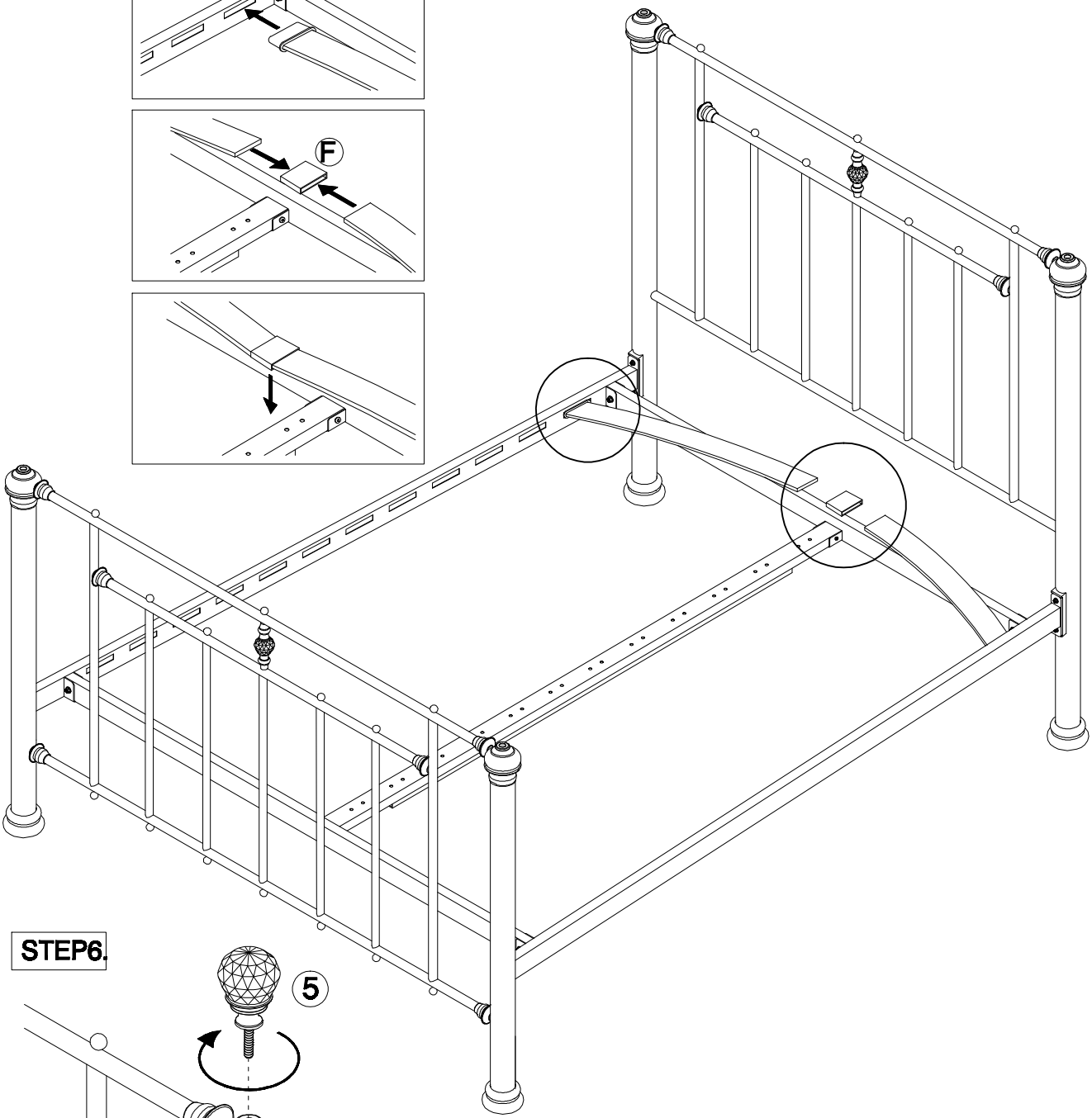
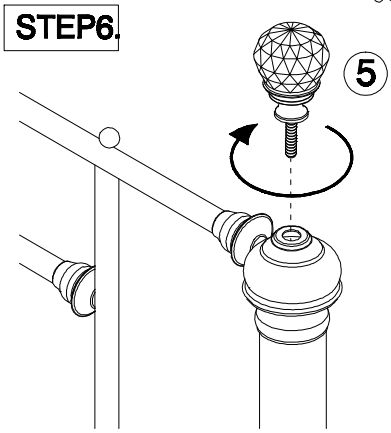
STEP6.