Computertisch Fabian - WL1.156

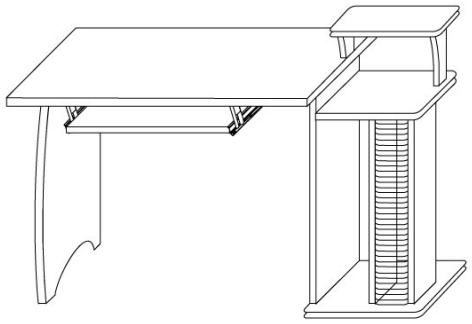

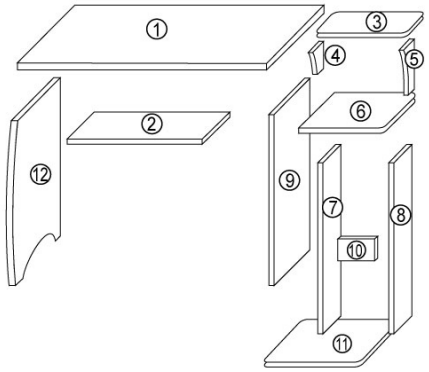

AX20	BX26	CX12	DX1
EX16	FX4	GX1	HX1

1

AX6 | BX8 | CX4 | HX1

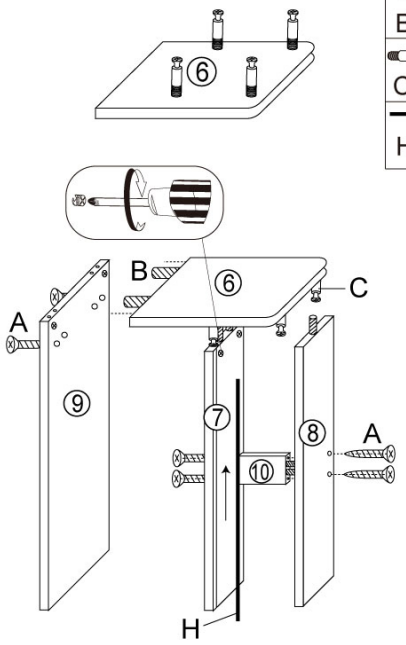

2

AX6 | BX4 | FX4

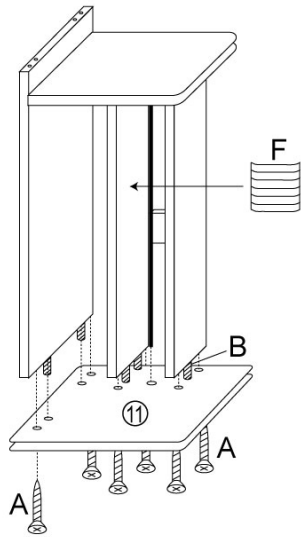

3

AX4 | BX4

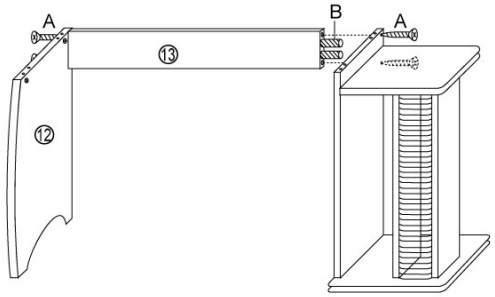

4

CX4 | DX1 | EX12 | GX1

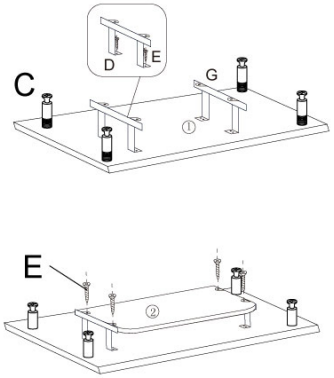

5

AX2 | BX4 | CX4

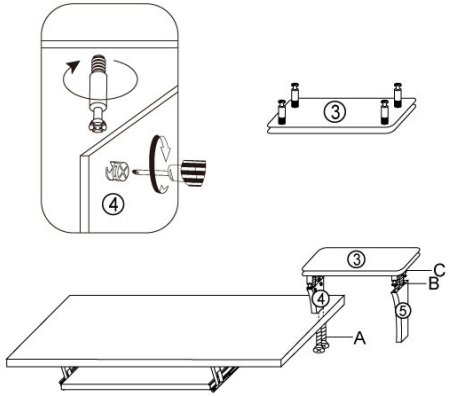

6

AX2 | BX6

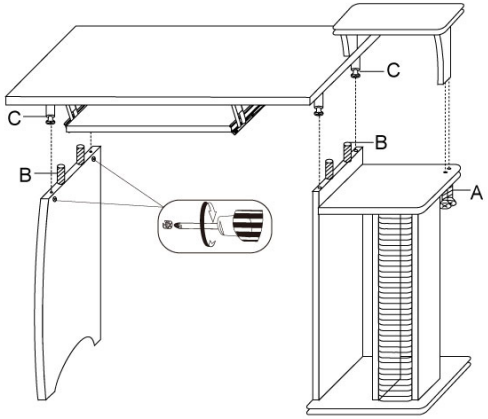

WOHNLING®
Möbel zum Wohlfühlen