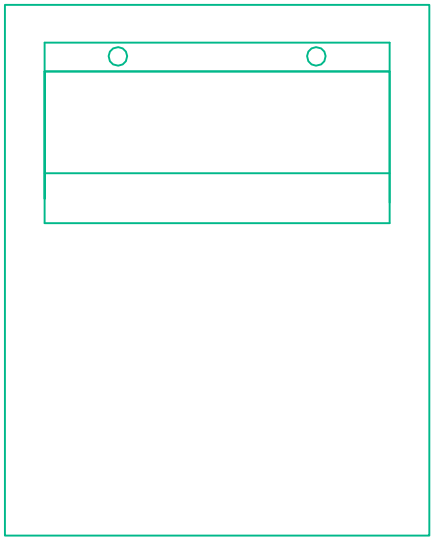

FRONT VIEW

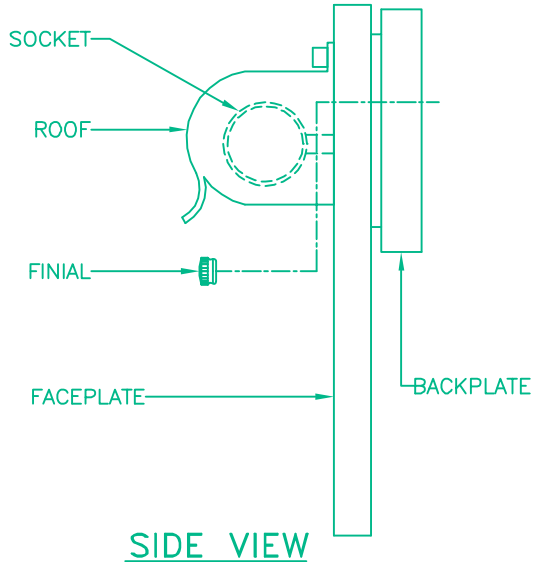

SIDE VIEW

NOTE: THE ACTUAL FINISH IS GILDED COPPER.

PRODUCT SPECIFICATIONS

- ☐ **OVERALL ASSEMBLED DIMENSIONS**
  HEIGHT: 32.5 CM (12–3/4"), WIDTH: 23 CM (9"), EXTENSION: 11.5 CM (4–1/2").
- ☐ **1 LIGHT:** UL LISTED. 100 WATT. MEDIUM BASE E–27 CERAMIC SOCKET.
- ☐ **FACEPLATE:** NATURAL GREEN SLATE WITH ROUGH EDGE, 32.5 CM (12–3/4") LENGTH x 23 CM (9") WIDTH. x 1.5 CM (5/8") THICKNESS.
- ☐ **BACKPLATE:** PAINTED ALUMINIUM, 16.5 CM (6–1/2") LENGTH x 11.5 CM (4–1/2") WIDTH. x 2.4 CM (1") HEIGHT.
- ☐ **ROOF:** PAINTED ALUMINIUM, 19 CM (7–1/2") WIDTH x 9.6 CM (3–3/4") EXTENSION x 8 CM (3–1/8") HEIGHT. SHAPED AS SHOWN.
- ☐ **SUPPLY WIRE:** UL LISTED. 18 AWG, 105°, MUST EXTEND A MINIMUM OF 15.2 (6") PAST CENTER OF BACKPLATE, BLACK/WHITE COLOR. WIRES MUST BE LEAD FREE.
- ☐ **LABELS:** UL AND CSA OR CUL, MANUFACTURING DATE, MODEL # AND COUNTRY OF ORIGIN LABELS PROVIDED ON INSIDE OF BACKPLATE. RELAMPING LABEL FOR 100 WATT MAX. TYPE "A" BULB PROVIDED NEAR SOCKET. RELAMPING LABELS ARE NOT ALLOWED TO BE PLACED ON THE OUTSIDE OF THE PRODUCT.

PACKAGING AND SHIPPING:

- ☐ THE ITEM IS ASSEMBLED FOR SHIPPING. THE WHOLE LANTERN IS SECURED SO THEY CAN NOT MOVE DURING SHIPPING.
- ☐ HARDWARE PACK #002 PROVIDED. ENTIRE FIXTURE IS COVERED IN A CLOSED PLASTIC BAG WITH A SMALL BAG OF SILICA INSIDE.
- ☐ THE CARTON IS MADE OF DOUBLE WALL, CORRUGATED CARDBOARD "A MA A". BROWN IN COLOR. THE INNER PACKING IS DIE–CUT CARDBOARD OR STYROFOAM TO PROTECT AND SECURE THE LAMP AND MUST PASS THE FEDEX DROP TEST REQUIREMENTS.
- ☐ EACH UNIT CARTON SHALL BE PRINTED WITH A LINE DRAWING AND THE KENROY HOME NAME AND LOGO, MODEL NUMBER, SKU NUMBER AND FINISH, EACH CARTON SHALL BE PROVIDED A UPC LABEL. THE UPC BAR CODE AS FOLLOWS: 053392103101.

OTHER DETAILS:

- ☐ ENTIRE BACKPLATE ASSEMBLY MUST SIT FLUSH AGAINST WALL SURFACE.
- ☐ ALL VISIBLE METAL PARTS MUST MATCH FIXTURE FINISH UNLESS OTHERWISE SPECIFIED.
- ☐ MODEL 10151COP INSTRUCTIONS ARE TO BE PRINTED CLEARLY ON QUALITY PAPER AND PACKED WITH EACH FIXTURE.
- ☐ ALL BAGS MUST BE LABELED WITH OFFICIAL "THIS BAG IS NOT A TOY" STATEMENT.
- ☐ ASSEMBLY TIME: 5 MINUTES.
- ☐ DIMS OF BOX: 38.5 CM (15–1/8") LENGTH x 30 CM (11–13/16") WIDTH x 18 CM (7") HEIGHT.
- ☐ NET WEIGHT: 8.8 LBS. GROSS WEIGHT: 10.3 LBS.
- ☐ THE ITEM MUST BE UL APPROVED FOR WET LOCATION. THE UL NUMBER IS E121837.

KENROY HOME
11660 CENTRAL PARKWAY
JACKSONVILLE, FL. 32224
PHONE: 904–642–4340
FAX: 904–642–4150

THIS DOCUMENT AND THE INFORMATION THAT IT DISCLOSES IS THE EXCLUSIVE PROPERTY OF KENROY HOME. ANY REPRODUCTION OR USE OF THIS DRAWING IN PART OR IN WHOLE, WITHOUT THE EXPRESS CONSENT OF THE PROPRIETOR IS PROHIBITED. © 2009 KENROY HOME.

DATE: 1/12/2009	SCALE: NONE	DRAWN BY: JAMES	REVISION DATE:	MODEL #: 10151COP
			REVISION DATE:	
			REVISION DATE:	FINISH: GC
REFERENCE: RETRON LARGE WALL LANTERN			APPROVAL:	PAGE: 1 OF: 1