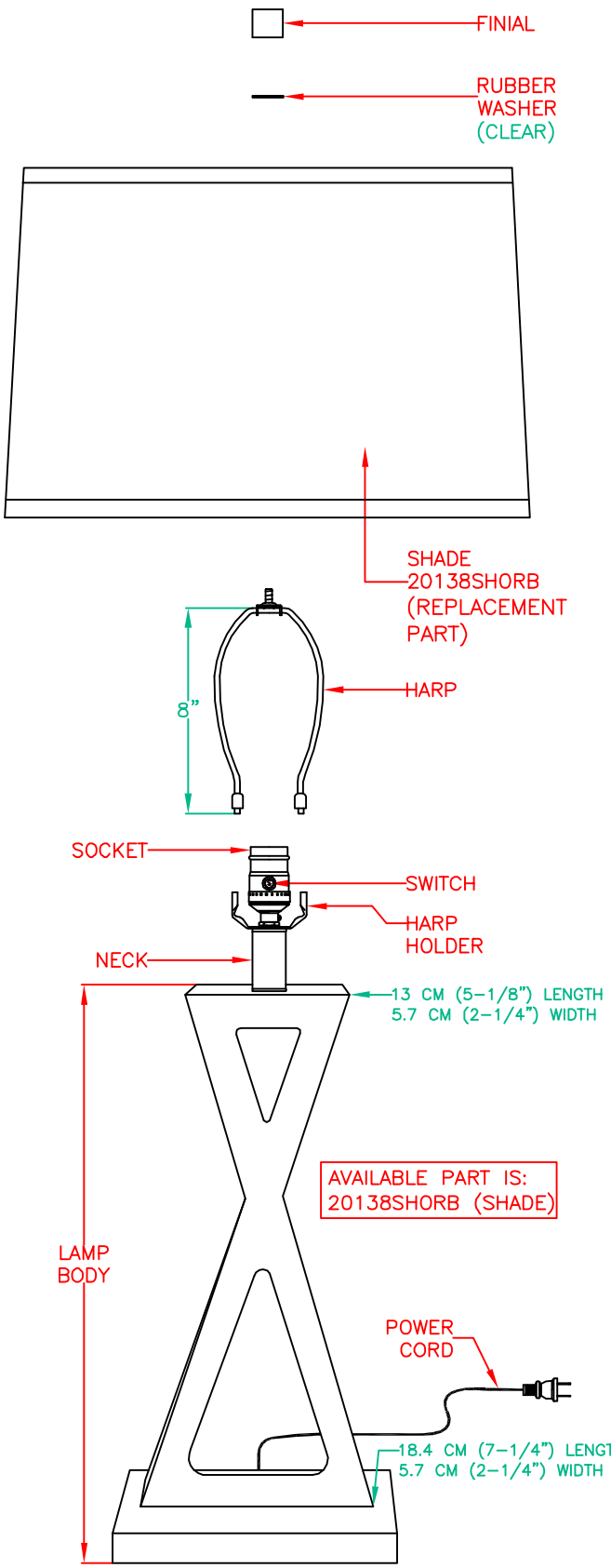

PRODUCT SPECIFICATIONS

OVERALL ASSEMBLED DIMENSIONS

HEIGHT: 77.8 CM (30-5/8"),
LENGTH: 38.1 CM (15"), WIDTH: 26.7 CM (10-1/2").

- **1 LIGHT:** UL LISTED, 100 WATT, MEDIUM BASE E-27 ALUMINUM SOCKET. 3-WAY ROTARY SWITCH. THE HARP, SADDLE, SPIDER AND SOCKET ARE PB FINISH.
- **FINIAL:** PAINTED RESIN, 2.5 CM (1") SQ. x 2.5 CM (1") HEIGHT.
- **SHADE:** WHITE TAPERED RECTANGULAR SHADE, TOP: 31.8 CM (12-1/2") LENGTH x 22.9 CM (9") WIDTH, BOTTOM: 38.1 CM (15") LENGTH x 26.7 CM (10-1/2") WIDTH, SLANT HEIGHT: 25.4 CM (10"). THE SPIDER DIAMETER IS NOT LESS THAN ø4 MM. THE SHADE FABRIC CONTENT: 100% COTTON.
- **NECK:** PAINTED STEEL, 2.5 CM (1") DIA. x 6.4 CM (2-1/2") LENGTH.
- **LAMP BODY:** PAINTED RESIN, 22.9 CM (9") LENGTH x 14.6 CM (5-3/4") WIDTH x 46 CM (18-1/8") HEIGHT. SHAPED AS SHOWN. FELT PAD INSTALLED ON BOTTOM OF LAMP BODY.
- **CORD:** UL LISTED, MIN 183 CM (6 FT.) LENGTH, 18 AWG., 2 CONDUCTORS, 105°C, TYPE SPT-2, SILVER/CLEAR COLOR. WIRES MUST BE LEAD FREE.
- **LABELS:** UL AND CSA OR CUL, MANUFACTURING DATE, MODEL # AND COUNTRY OF ORIGIN LABEL PROVIDED. RELAMPING LABEL FOR 100 WATT MAX. 3-WAY TYPE "A" BULB PROVIDED ON SOCKET.

PACKAGING AND SHIPPING DETAILS

- THE LAMP IS DISASSEMBLED FOR SHIPPING. EACH PART IS CAREFULLY WRAPPED IN A PLASTIC BAG AND PLACED SECURELY IN THE INNER PACKING SO IT CAN NOT MOVE AROUND DURING SHIPPING. A SMALL BAG OF SILICA IS INCLUDED IN THE PACKAGE.
- THE CARTON IS MADE OF DOUBLE WALL, CORRUGATED CARDBOARD "A MA A". BROWN IN COLOR. THE INNER PACKING IS DIE-CUT CARDBOARD OR STYROFOAM TO PROTECT AND SECURE THE LAMP AND MUST PASS THE SPECIFIED DROP TEST REQUIREMENTS.
- EACH CARTON SHALL BE PRINTED WITH A LINE DRAWING AND THE KENROY HOME NAME AND LOGO, MODEL NUMBER, SKU NUMBER AND FINISH, EACH CARTON SHALL BE PROVIDED A UPC LABEL. THE UPC BAR CODE AS FOLLOWS: ORB=053392107819.

OTHER DETAILS

- MODEL 20138ORB INSTRUCTIONS ARE TO BE PACKED WITH EACH LAMP. INSTRUCTIONS MUST BE PRINTED CLEARLY ON QUALITY PAPER.
- ALL VISIBLE PARTS, EXCEPT SHADE, MUST MATCH LAMP FINISH UNLESS OTHERWISE SPECIFIED.
- ALL BAGS MUST BE LABELED WITH OFFICIAL "THIS BAG IS NOT A TOY" STATEMENT.
- LAMP MUST REST FLAT ON SURFACE AND NOT ROCK. LAMP MUST PASS AN 8° TILT TEST.
- ASSEMBLY TIME: 5 MINUTES.
- THE UL NUMBER IS E229128.
- DIMS OF BOX: 67.6 CM (26-5/8") LENGTH x 45.1 CM (17-3/4") WIDTH x 42 CM (16-1/2") HEIGHT.
- NET WEIGHT: 7 LBS. GROSS WEIGHT: 12.1 LBS.
- TWO TABLE LAMPS ARE INCLUDED.

KENROY HOME
11660 CENTRAL PARKWAY
JACKSONVILLE, FL. 32224
PHONE: 904-642-4340
FAX: 904-642-4150

THIS DOCUMENT AND THE INFORMATION THAT IT DISCLOSES IS THE EXCLUSIVE PROPERTY OF KENROY HOME. ANY REPRODUCTION OR USE OF THIS DRAWING IN PART OR IN WHOLE, WITHOUT THE EXPRESS CONSENT OF THE PROPRIETOR IS PROHIBITED. © 2009 KENROY HOME.

DATE: 5/22/2009	SCALE: NONE	DRAWN BY: JAMES	REVISION DATE:	MODEL #: 20138
REFERENCE: LOGAN TABLE LAMP		APPROVAL:	REVISION DATE:	FINISHES: ORB
			REVISION DATE:	PAGE: 1 OF: 1