CERAMIC VESSEL

Round semi-recessed ceramic vessel with overflow

Model: CB4090

Codes/Standards Applicable

Specified model meets or exceeds the following:

- ASME A112.19.2
- IAPMO/cUPC®
- CSA B45
- CMR 248

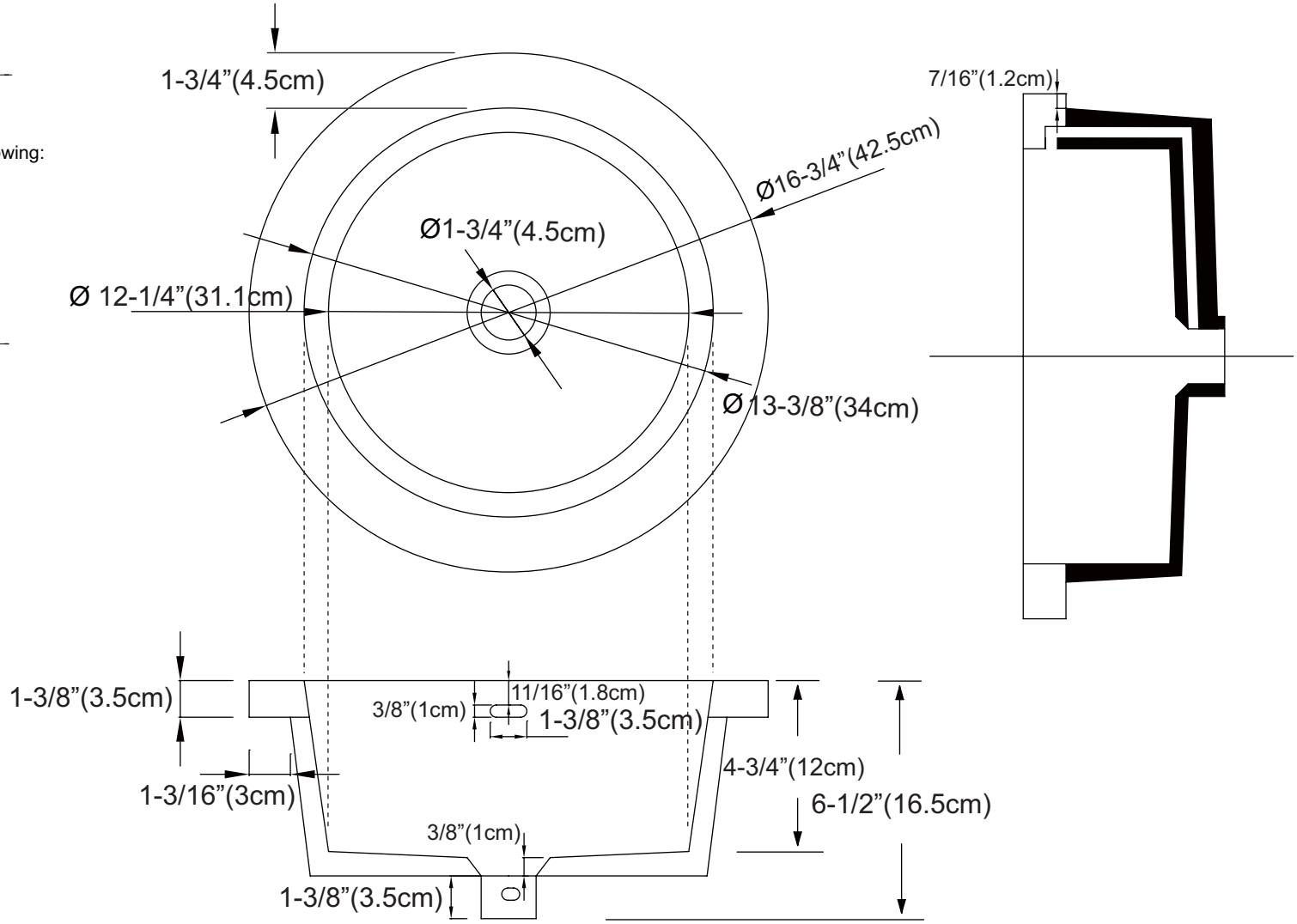

RONBOW Materials Corp., All Rights Reserved.