Vintage Collection

CORSICA 36"

36" Wood cabinet with two full extension drawers

Model: VCA3622

Features

- 2 full extension dovetail construction drawers
- Matching finished interior
- Available tops: Wood, Cream beige marble (MY) & Absolute black granite (AB)
- Available finishes: Colonial Cherry (F11)

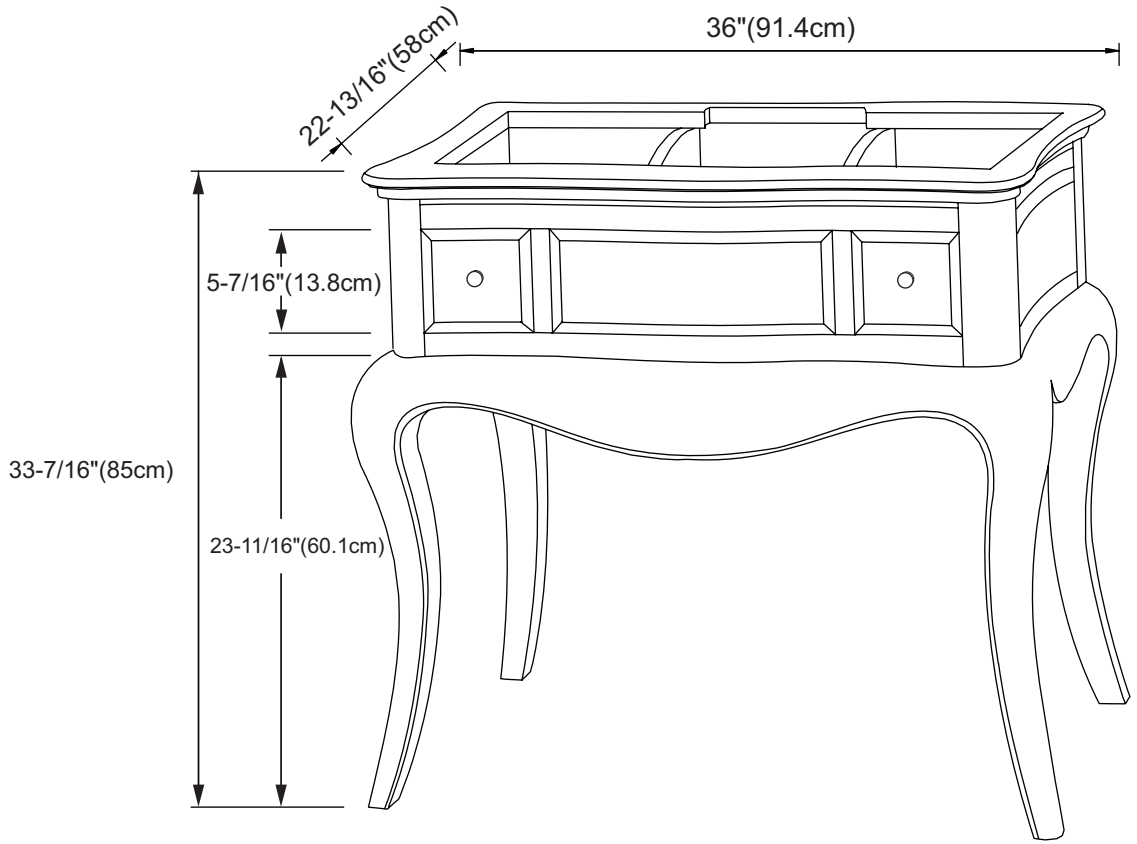

RONBOW Materials Corp., All Rights Reserved.