QUOIZEL
6 CORPORATE PARKWAY
GOOSE CREEK, SC. 29445
www. quoizel. com

Quoizel, Inc.
6 Corporate Parkway
Goose Creek, SC
29445

Customer Service
Phone 631.273.2700
Fax 631.231.7102
www.quoizel.com

Assembly Instruction Sheet #IS-MCLG337RC
For Style MCLG337RC

Tools Required: Flathead screwdriver, Phillips screwdriver, pliers, wire cutters, wire strippers, electrical tape, safety glasses.

Bulb Recommended: (3) Medium Base 100W Maximum
Estimated Assembly Time: 20-30 minutes

Preparation: Identify and inspect all parts before beginning installation. Check package content list and diagrams below to be sure all parts are present. If any parts are missing or damaged, do not attempt to assemble, install, or operate the fixture. Contact customer service for replacement parts.

Warnings and Cautions

Turn off electricity at circuit breaker or main fuse box before installation. Consult a licensed electrician if in doubt.

These instructions are provided for your safety. It is very important you read them completely before installing the fixture. We strongly recommend that a licensed, professional electrician perform the installation.

Disconnect fixture from power source before replacing bulbs. Make sure bulbs are given sufficient time to cool before removal. Do not subject glass parts to any shock while in operation or shattering may result.

Thank you for purchasing a Quoizel product.
Need assistance with parts or assembly? Call Quoizel customer service at 1-631-273-2700
or visit us on-line at www.quoizel.com

c 2012 Quoizel Inc.

April 2012

MCLG337RC

FINISH: RENAISSANCE COPPER

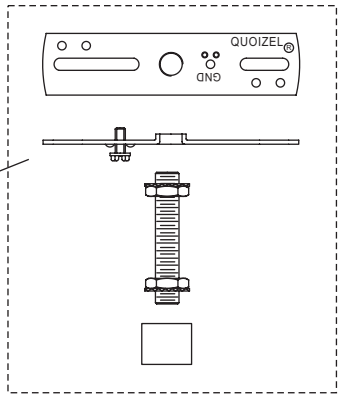

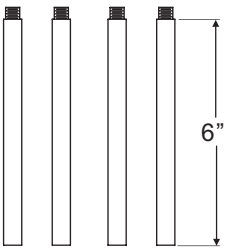

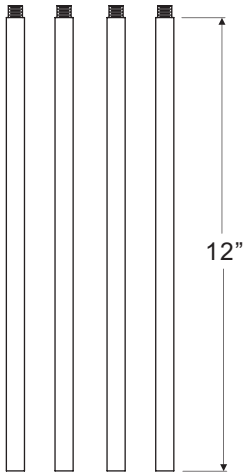

Overall Height 60.5"
include (4)6” and (4)12” Rods

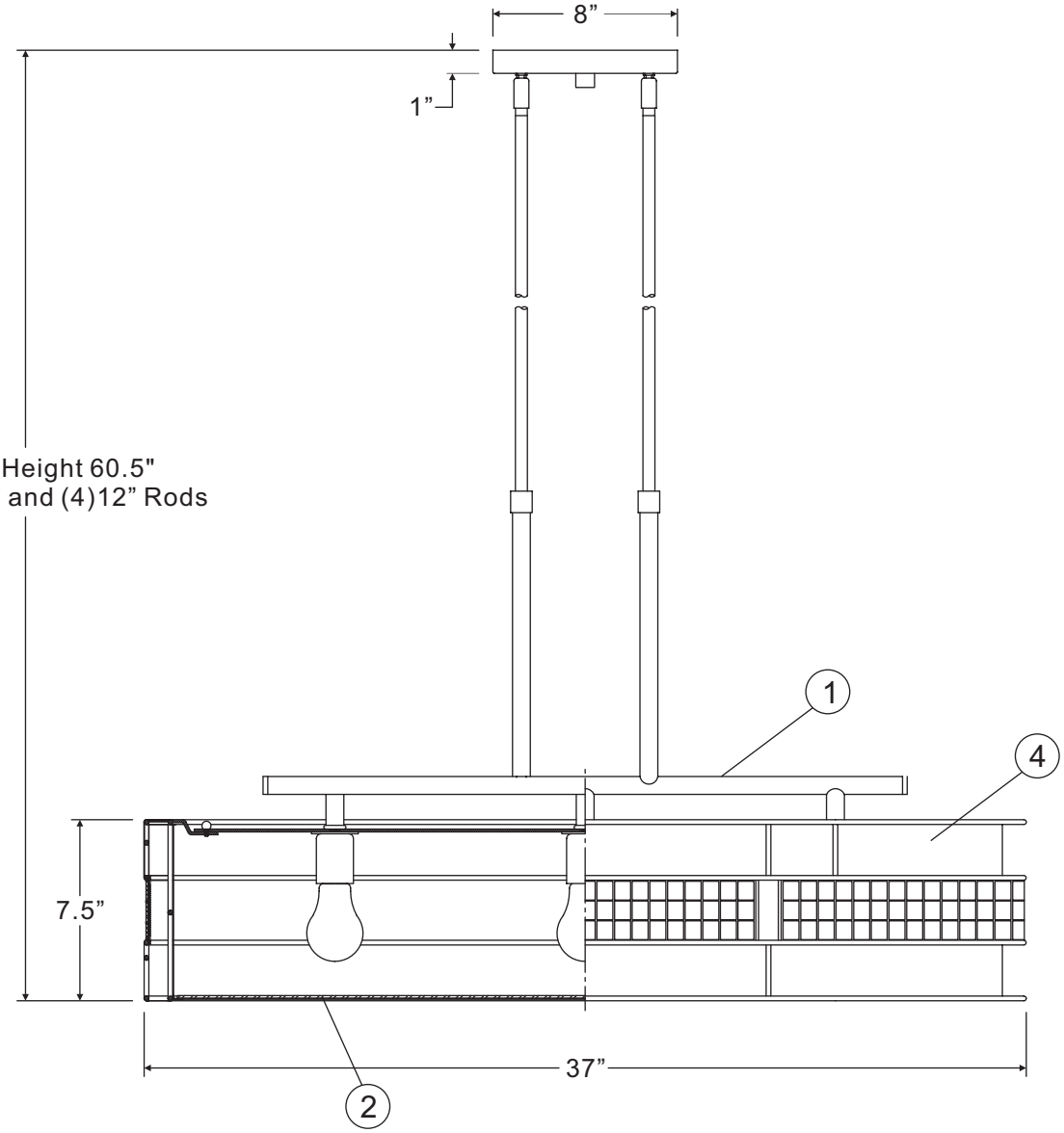

(3)100W Medium
Base Bulbs
(Not Supplied)

NOTE: ALL DIMENSIONS ARE ROUNDED UP TO THE NEAREST 1/2″

NO.	PART NUMBER	REPLACEMENT PART DESCRIPTION	REQ.
1	1337RCMCLG	BASE MCLG337RC	1
2	G3289DI	DIFFUSER	1
3	9551KIT	MOUNTING HARDWARE RENAISSANCE COPPER 4”D	1
4	S1368MC	SHADE MICA	1

QUOIZEL
6 CORPORATE PARKWAY
GOOSE CREEK, SC. 29445
www. quoizel. com

Assembly Instruction Sheet #IS-MCLG337RC
For Style MCLG337RC

Package Contents

Part	Description	Quantity
A	Crossbar	1 pc.
B	Nipple	1 pc.
C	Lock Washer	4 pcs.
D	Hex Nut	5 pcs.
E	Lock Ball	1 pc.
F	Reinforced Plate	1 pc.
G	Ceiling Canopy	1 pc.
H	Swivel	2 pcs.
I	6” Rod	4 pcs.
J	12” Rod	4 pcs.
K	Lock Screw	8 pcs.
L	Socket Assembly	1 pc.
M	Diffuser	1 pc.
N	Shade	1 pc.
O	Flat Washer	1 pc.
P	Lanyard	1 pc.

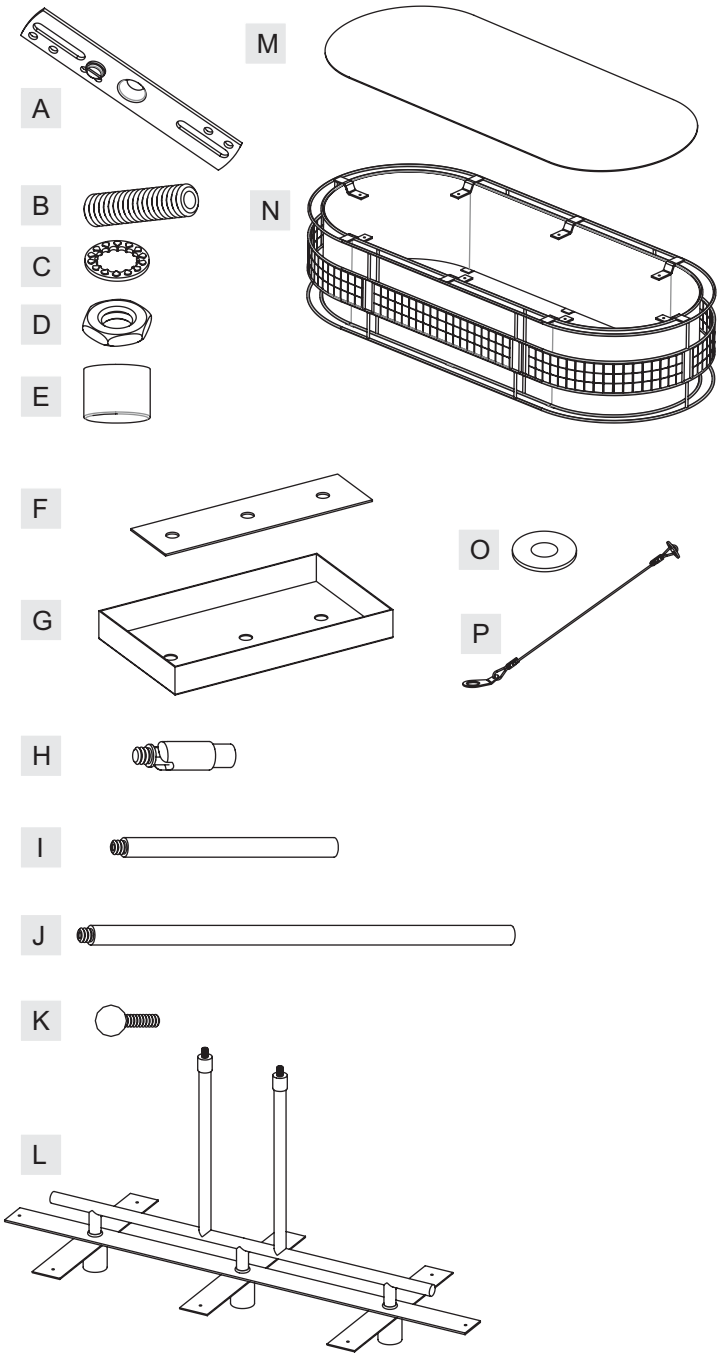

Thank you for purchasing a Quoizel product.
Need assistance with parts or assembly? Call Quoizel customer service at 1-631-273-2700
or visit us on-line at www.quoizel.com

c 2012 Quoizel Inc.

April 2012

QUOIZEL
6 CORPORATE PARKWAY
GOOSE CREEK, SC. 29445
www. quoizel. com

Assembly Instruction Sheet #IS-MCLG337RC
For Style MCLG337RC

STEP 1 – Assemble Rods

A. Determine the Rods (I/J) to be assembled to the Socket Assembly (L) according to your hanging height.
C. Pass Supply Wires and Ground Wire through the chosen Rods (I/J) and then thread the chosen Rods (I/J) and the Socket Assembly (L) together. Hand tighten until snug.

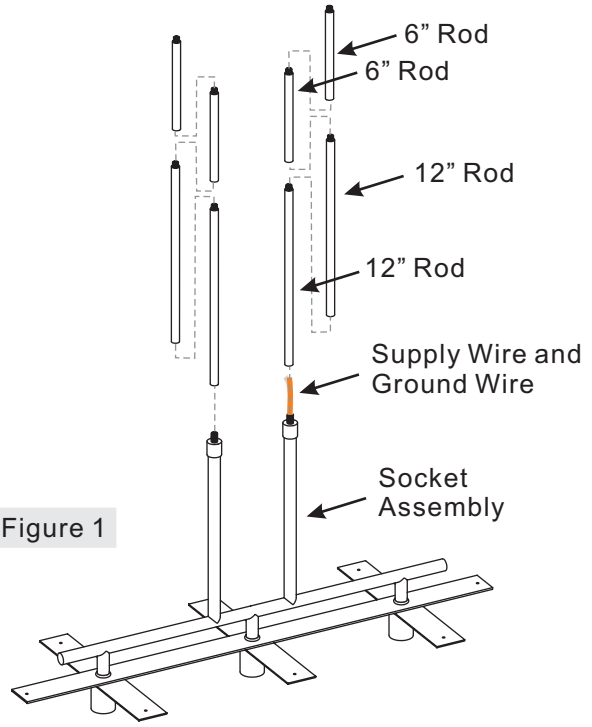

Figure 1

STEP 2 – Attach Ceiling Canopy to Rods

A. Thread the Swivel (H) onto the nipple on the top end of the Upper Rod. Hand tighten until snug.
B. Place the Ceiling Canopy (G), the Reinforced Plate (F) over the nipple on the Swivels (H). And then place the Lanyard(P), the Flat Washer (O) and one Lock Washer (C) over one Swivels (H). Place another Washer over another Swivel (H). Secure by threading Hex Nuts (D) onto Swivels (H). Hand tighten until snug.

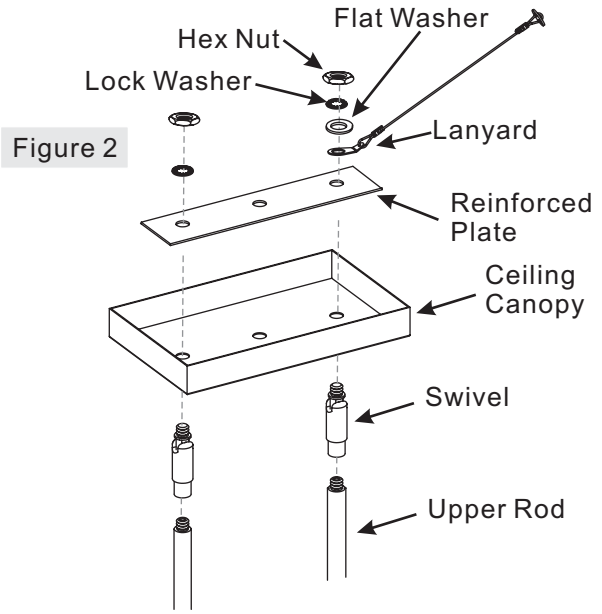

Figure 2

Thank you for purchasing a Quoizel product.
Need assistance with parts or assembly? Call Quoizel customer service at 1-631-273-2700
or visit us on-line at www.quoizel.com

c 2012 Quoizel Inc.

April 2012

QUOIZEL
6 CORPORATE PARKWAY
GOOSE CREEK, SC. 29445
www. quoizel. com

Assembly Instruction Sheet #IS-MCLG337RC
For Style MCLG337RC

STEP 3 – Assemble Shade and Diffuser

A. Locate the Shade (N) onto a flat working surface. Place the Diffuser (M) inside of the Shade (N), attach to the Tabs on the bottom edge of the Shade (N).
B. Place the Socket Assembly (L) onto the Shade (N). Match holes on the Bars and mounting holes on the Tabs. Secure the Socket Assembly (L) and the Shade (N) together with Lock Screws (K). Hand tighten until snug.

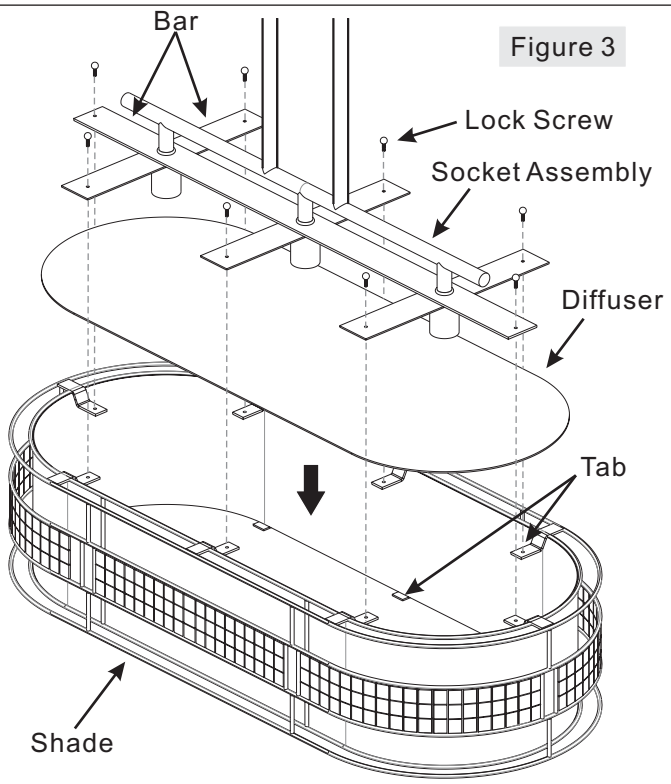

Figure 3

STEP 4 – Attach Crossbar to Outlet Box

A. Secure the Crossbar (A) to the outlet box with outlet box screws (not supplied). Tighten until snug.

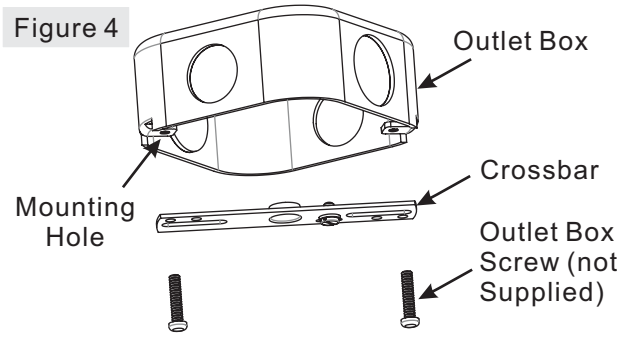

Figure 4

STEP 5 – Attach Nipple to Crossbar

A. Thread one Hex Nut (D) onto the top end of the Nipple (B).
B. Place one Lock Washer (C) over the top end of the Nipple (B) and then thread the Nipple (B) into the center lock hole of the Crossbar (A).
C. Using pliers, thread the Hex Nut (D) against the Crossbar (A) and hand tighten until snug.

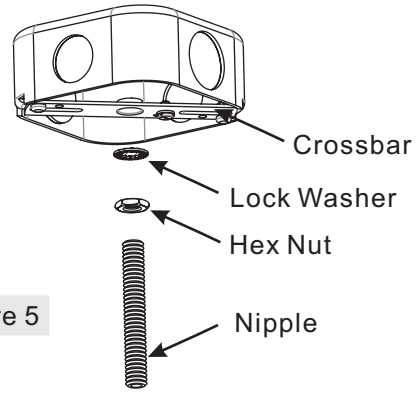

Figure 5

Thank you for purchasing a Quoizel product.
Need assistance with parts or assembly? Call Quoizel customer service at 1-631-273-2700
or visit us on-line at www.quoizel.com

c 2012 Quoizel Inc.
April 2012

QUOIZEL
6 CORPORATE PARKWAY
GOOSE CREEK, SC. 29445
www. quoizel. com

Assembly Instruction Sheet #IS-MCLG337RC
For Style MCLG337RC

STEP 6 – Attach Lanyard

A. The purpose of the lanyard is to provide the installer a means to support the fixture from the junction box while connecting the electrical wires. This enables the fixture to hang from the junction box and your hands are free to make the wire connections.
B. Turn the Button Stop so it may be inserted into the crossbar slot. Make sure the Button Stop is completely inside the crossbar. Slowly release the fixture to make sure it is supported by the Button Stop. Proceed to the wiring steps. Once you are complete with the wiring there is nothing to do with Lanyard. The Lanyard will push into the junction box when the fixture is placed for final mounting.

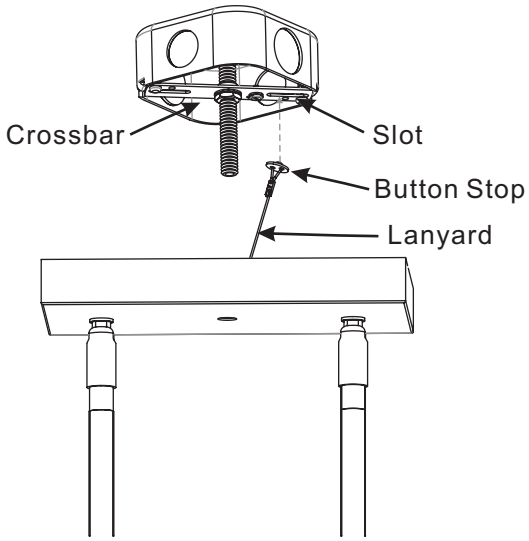

Figure 6

STEP 7 – Make Wire Connections

A. Use standard wire connectors to make all wire connections. (Connectors are not included with fixture.) Strip and prepare wire ends according to instructions supplied with connectors.
B. Connect White Supply Wire from the Outlet Box to White Wire from fixture.
C. Connect Black (or Red) Supply Wire from the Outlet Box to Black Wire from fixture.
D. Connect Ground Wire from the Outlet Box to Ground Wire from fixture.
E. Twist connectors until wires are tightly joined together.
F. Wrap each connection with approved electrical tape and carefully stuff all the connected wires into the Outlet Box.

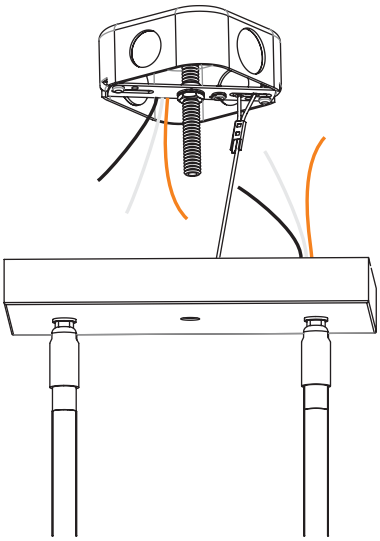

Figure 7

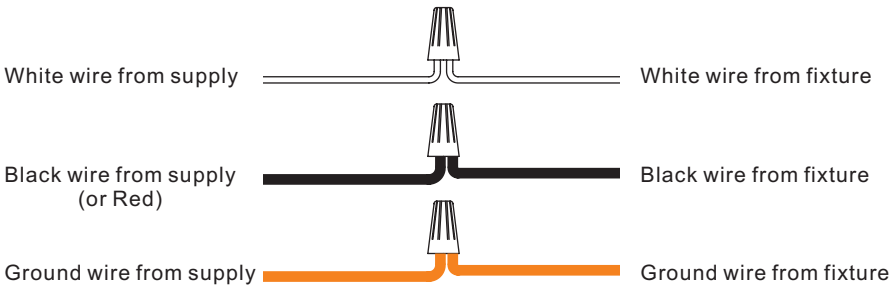

Figure 8

Thank you for purchasing a Quoizel product.
Need assistance with parts or assembly? Call Quoizel customer service at 1-631-273-2700
or visit us on-line at www.quoizel.com

c 2012 Quoizel Inc.
April 2012

QUOIZEL
6 CORPORATE PARKWAY
GOOSE CREEK, SC. 29445
www. quoizel. com

Assembly Instruction Sheet #IS-MCLG337RC
For Style MCLG337RC

STEP 8 – Install Ceiling Canopy

A. Thread another Hex Nut (D) onto the end of the Nipple (B). Pass the Lock Washer (C) and the Ceiling Canopy (G) over the end of the Nipple (B). Secure by threading the Hex Nut (D) onto the Nipple (B). Hand tighten until snug.
B. Thread the Lock Ball (E) onto the end of the Nipple and hand tighten until snug.

Figure 9

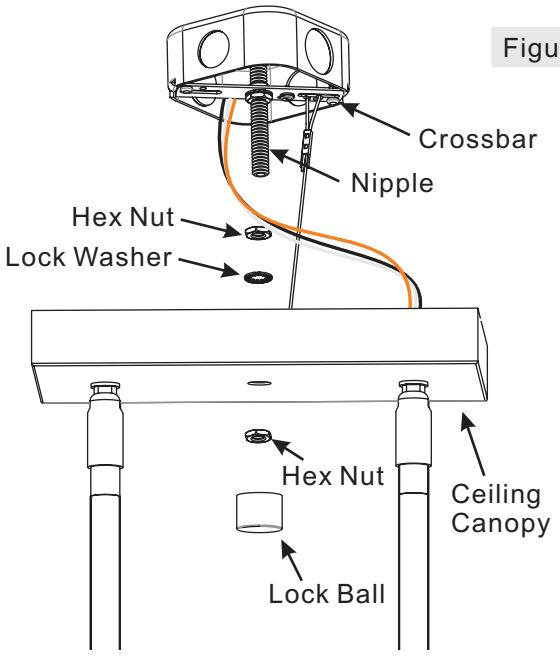

STEP 9 – Install Bulb

A. This fixture uses standard bulb with a standard screw base. Maximum 100 watts.
B. Insert bulb and screw properly into place.

Your fixture is now assembled and ready to use. Enjoy!

Figure 10

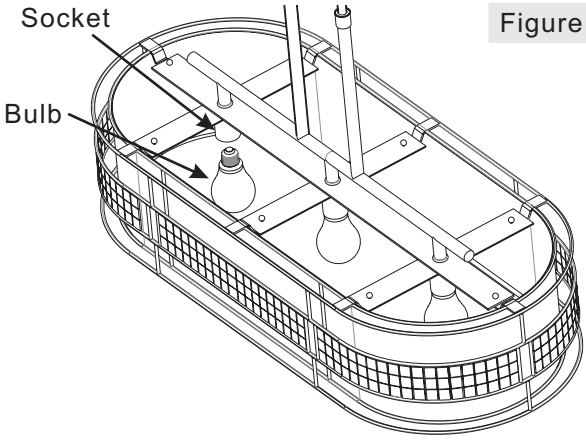

Thank you for purchasing a Quoizel product.
Need assistance with parts or assembly? Call Quoizel customer service at 1-631-273-2700
or visit us on-line at www.quoizel.com

c 2012 Quoizel Inc.

April 2012