QUOIZEL
6 CORPORATE PARKWAY
GOOSE CREEK, SC. 29445
www. quoizel. com

INSTRUCTION SHEET IS-QR9751
STYLE NUMBER: QR9751, QR9752

PACKAGE CONTENTS

ISSUED 07-2010

PART	DESCRIPTION	QUANTITY
A	Mirror Hanger	2 pcs
B	Lock Screw	4 pcs
C	Hanger Nail	4 pcs
D	Mirror	1 pc

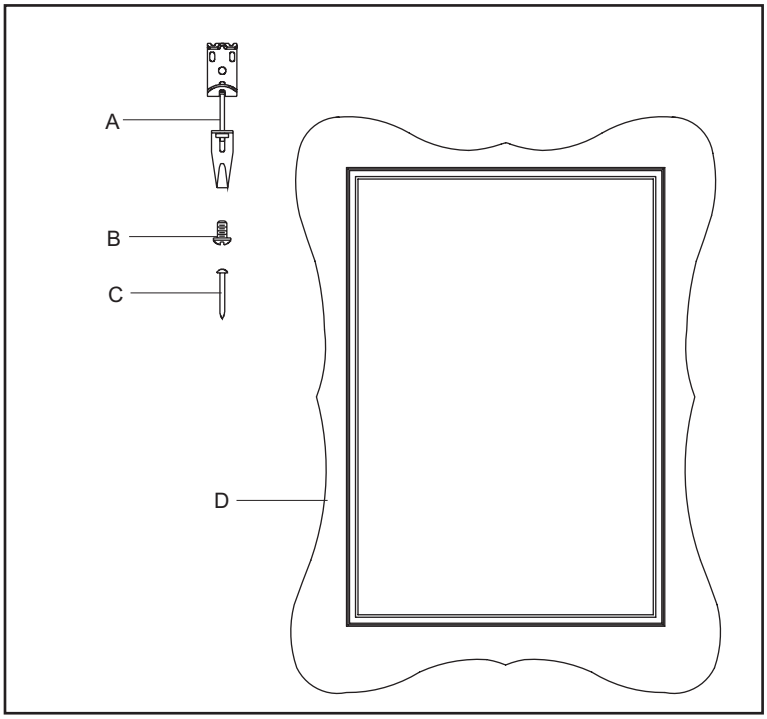

CAUTIONS

- These instructions are provided for your safety. It is very important that they are read completely before the installation of your fixture.

PREPARATION

- Before beginning installation of product, make sure all parts are present. Compare parts with package contents list and diagram above. If any part is missing or damaged, do not attempt to assemble, install or operate the product. Contact customer service for replacement part.
- Estimated Assembly Time: 20 - 30 minutes
- Tool Required for Assembly (not included): Flathead screwdriver, Phillips screwdriver, Pliers.

FOR VERTICAL

STEP 1:

a. Lift and position where the Mirror will reside on the wall surface and with a tape measure, mark distance from floor to the bottom edge of the frame with a pencil. Mark should be located at a point representing ½ of mirror width.
b. Place the Mirror on a flat surface with back facing you. Draw a line from the top edge of the Hangers at the back of the Mirror. Measure the distance from the bottom edge of the Mirror Frame to the line. This represents distance “B” in the illustration.
c. With tape measure, add this distance to Mark “A” on wall surface and mark with pencil.
d. Measure distance between center line of the two Hangers. Add this ½ distance from Mark “B” on each side and mark with pencil. (Distance “C” in the illustration)
e. Measure 3” up from Mark “C” and mark. These marks are locators for the (2)Mirror Hangers. Check for marks straightness with level.

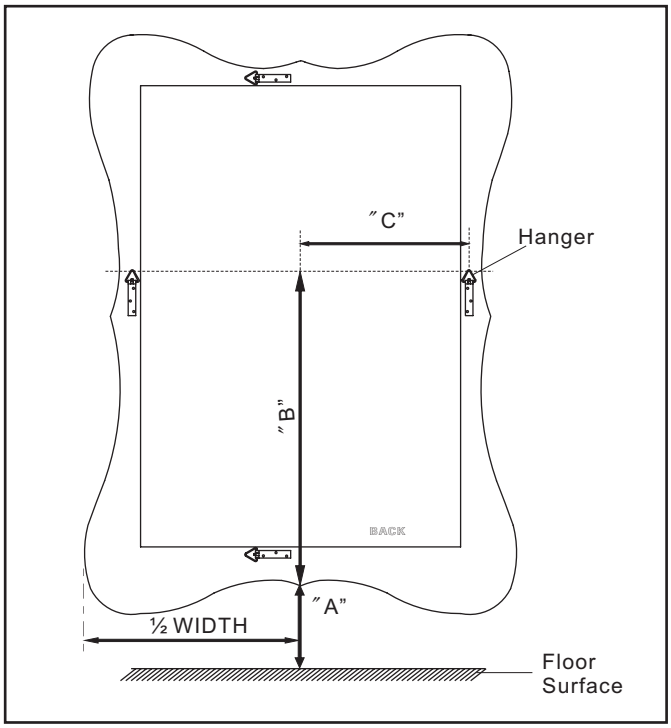

STEP 2:

a. Locate Mirror Hangers and align the top center with 3” Locator mark. Secure them to wall surface with Hanger Nails. **Please be noted that the Mirror Hangers are fully adjustable allowing for easy leveling.**
b. With Mirror Hangers properly installed, be sure to make sure that the (2) Bracket Catches are approximately equal in length from the top of Mirror Hangers. Adjust overall length with Adjustment Screws.

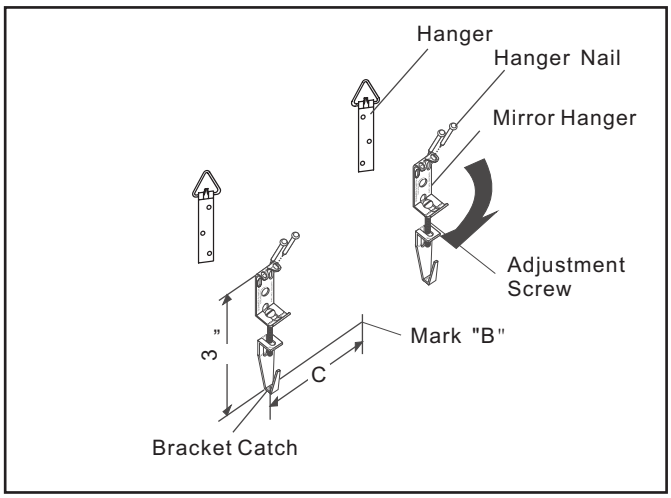

STEP 3:

a. With the help of another person, pass the Hangers at the back of the Mirror over the Mirror Hangers so that the Hangers rests on the inside of the Bracket Catches.
b. With Mirror Hangers properly installed, be sure to make sure that the (2) Bracket Catches are approximately equal in length from the top of Mirror Hangers. Adjust overall length with Adjustment Screws.

STEP 4:

a. Clean glass with household glass cleaner. Retain this sheet for future reference.

FOR HORIZONTAL

STEP 5:

a. Lift and position where the Mirror will reside on the wall surface and with a tape measure, mark distance from floor to the bottom edge of the frame with a pencil. Mark should be located at a point representing ½ of mirror width.
b. Place the Mirror on a flat surface with back facing you. Draw a line from the top edge of the Hangers at the back of the Mirror. Measure the distance from the bottom edge of the Mirror Frame to the line. This represents distance “B” in the illustration.
c. With tape measure, add this distance to Mark “A” on wall surface and mark with pencil.
d. Measure distance between center line of the two Hangers. Add this ½ distance from Mark “B” on each side and mark with pencil. (Distance “C” in the illustration)
e. Measure 3” up from Mark “C” and mark. These marks are locators for the (2)Mirror Hangers. Check for marks straightness with level.

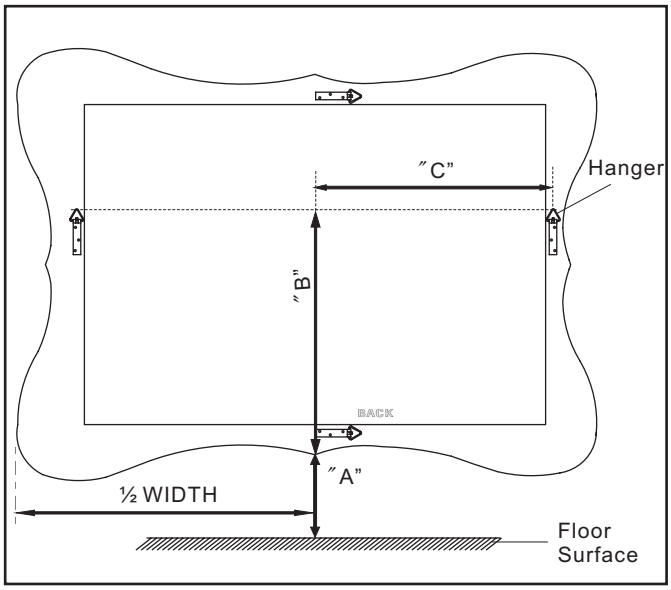

STEP 6:

a. Locate Mirror Hangers and align the top center with 3” Locator mark. Secure them to wall surface with Hanger Nails. **Please be noted that the Mirror Hangers are fully adjustable allowing for easy leveling.**
b. With Mirror Hangers properly installed, be sure to make sure that the (2) Bracket Catches are approximately equal in length from the top of Mirror Hangers. Adjust overall length with Adjustment Screws.

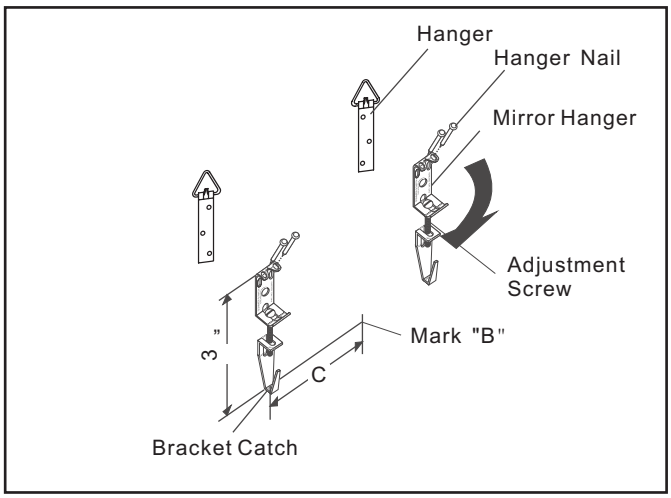

STEP 7:

a. With the help of another person, pass the Hangers at the back of the Mirror over the Mirror Hangers so that the Hangers rests on the inside of the Bracket Catches.
b. With Mirror Hangers properly installed, be sure to make sure that the (2) Bracket Catches are approximately equal in length from the top of Mirror Hangers. Adjust overall length with Adjustment Screws.

STEP 8:

a. Clean glass with household glass cleaner. Retain this sheet for future reference.