CARE AND MAINTENANCE

Unplug lamps before using any cleaning solutions. Dust shades with a feather duster or with an appropriate vacuum-brush attachment. Wipe with a soft, dry cloth and clean lamp bases with the methods appropriate to the material. Avoid the use of chemicals and household cleaners as they may damage the finish.

SAFAVIEH LIGHTING

NOTICE& IMPORTANT SAFETY INSTRUCTIONS

* Please make sure that you have all parts indicated before you begin assembly of this item
* This item should be assembled on a soft surface to prevent scratching the finish during assembly
* To reduce the risk of fire, electrical shock or injury to persons or property, please follow the guideline below for safe use and installation
*The external flexible cable or cord of this luminaire cannot be replaced;
If the cord is damaged, the luminaire shall be destroyed

Model# LIT4117A
Product Dimensions: 13" X 13"X 22.5 "H

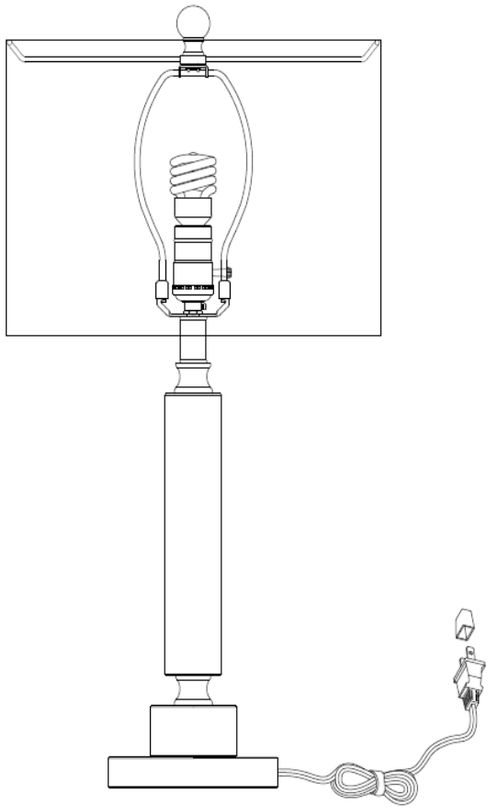

**This portable lamp has a polarized plug (one blade is wider than the other) as a safety feature to reduce the risk of electric shock. this plug will fit in a polarized outlet only one way. if the plug does not fit fully in the outlet, reverse the plug, if it still does not fit, contact a qualified electrician. Never use with an extension cord unless the plug can be fully inserted. do not attempt to defeat this safety feature.

Part List and Hardware List

PIECE	DESCRIPTION	PICTURE	QUANTITY	PIECE	DESCRIPTION	PICTURE	QUANTITY
A	Lamp base	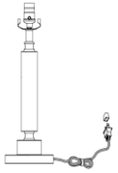	1X	E	Shade		1X
B	Saddle		1X	F	Finial		1X
C	Socket		1X	G	Bulb		1X
D	Harp		1X				

PREPARATION

Before beginning assembly of product, make sure all parts are present. Compare parts with package contents list and hardware contents list. If any part is missing or damaged, do not attempt to assemble the product.
Estimated Assembly Time: 6 minutes.

1

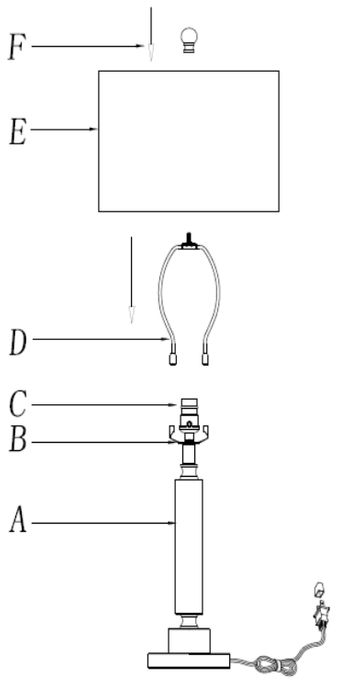

Step 1
Unpack all parts from cartons carefully
Insert the Harp (D) into the Saddle (B).
Put the shade(E) on the Harp(D), then tighten the Finial (F)into the Harp (D)

2

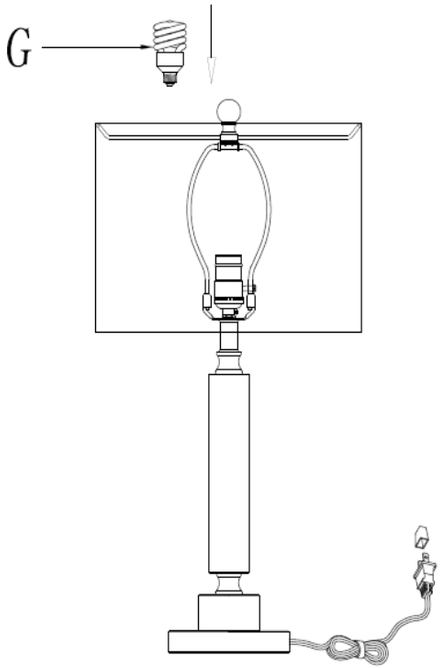

Step2
Insert the bulb(G) into the socket(C).

3

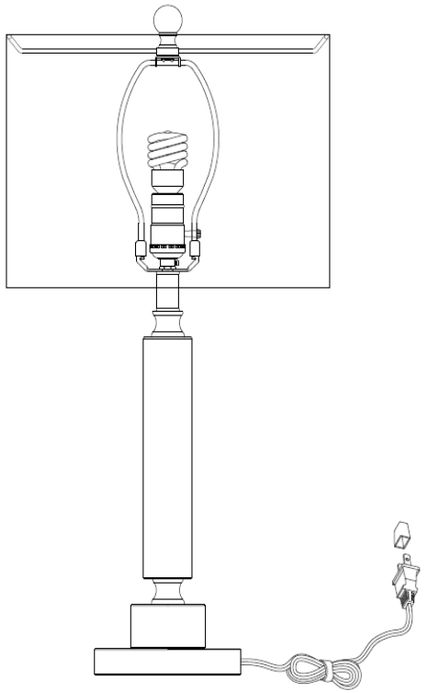

Step3
Put the light on a level surface to check if everything is stable.

ENJOY YOUR LAMP