Bold

"The Bold series developed from my fascination with laser cutting technology. With the use of a laser, you can cut a form or pattern in sheet metal with extreme accuracy. This technology allows you to handle the sheet very efficiently with very little wastage. The timeless appearance of the Bold series endows it with charisma, making it a worthy addition to the MOOOI collection!"

Roderick Vos

Designer	Roderick Vos	
Year of design	2005	
Material	Powder coated steel	
Additional	Candles are not supplied and are to be ordered seperately	
Product Codes	Moooi, accessories, little bold, black	MOABL5----B
	Moooi, accessories, big bold, black	MOABB5----B
	Moooi, accessories, menora bold, black (7 holders)	MOABM7----B

Detailing

The intelligent technique used to give the Bold it's 3rd dimension can be seen here.
The candle spire holds the candle in place.
(The spire is sharp and must be handled with care.)

Colour

Black

visit www.moooi.com for more information about the collection

CM150508

Main dimensions

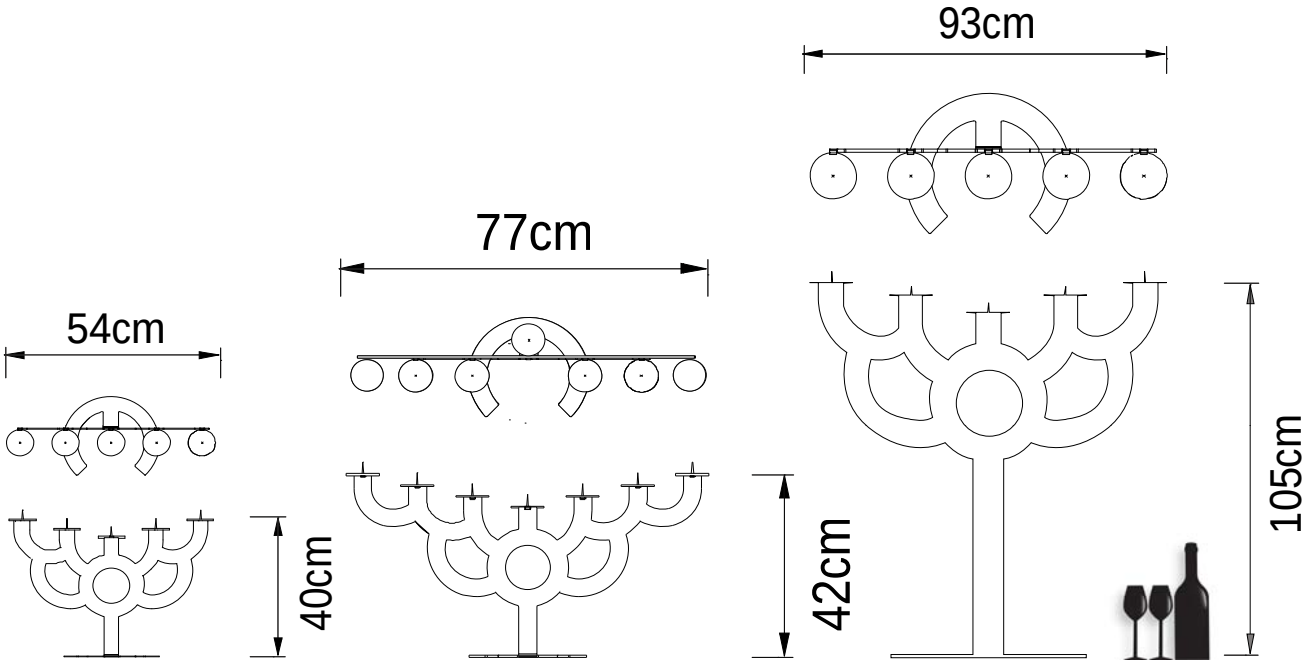

Little Bold | Menorah Bold | Big Bold

Technical

Moooi recommends leaving approx 2cm remaining on the candle before replacing. There is no other technical information required for this product.

Packaging

H-58cm
W-46cm
D-26cm

1-Colli
4-Net
5-Gross

H-78cm
W-46cm
D-26cm

1-Colli
4.8-Net
6-Gross

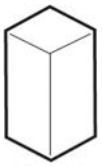

H-122cm
W-97cm
D-42cm

1-Colli
19.5-Net
22-Gross

Additional

Moooi, accessories, box of CANDLES little bold,	MOABL5C----
Moooi, accessories, box of CANDLES menora bold,	MOABM7C----
Moooi, accessories, box of CANDLES big bold,	MOABB5C----

Photography

Photography by Ingo Powilleit

Cleaning Instructions

Most good household cleaning products can be used on this product in conjunction with a soft cloth or sponge. Avoid using abrasive cleaning applicators.