Million Dollar Baby®
Exclusively Yours

M0391 & M0591 ASSEMBLY AND OPERATION MANUAL

This crib will provide many years of service if you adhere to the following guidelines for assembly, maintenance and operation. This crib is for residential use only. Any institutional use is strictly prohibited. Ask your dealer or visit our website for replacement of missing parts if needed. Please be sure to follow the instructions for proper assembly. Do not use power screw drivers. All screw holes have been pre-drilled or have metal inserts. Be sure to tighten all screws firmly. All of our cribs are made from natural woods. Please understand that natural woods have color variations which are the result of nature and are not defects in workmanship. DO NOT SUBSTITUTE PARTS. ALL MODELS HAVE THE SAME QUANTITY OF PARTS AND HARDWARE. YOUR MODEL MAY LOOK DIFFERENT FROM THE ONE ILLUSTRATED DUE TO STYLISTIC VARIATIONS.

---

1 Unpack and separate all parts and different size screws. All screw holes have been pre-drilled or have metal inserts. Be sure to tighten all screws firmly. Ask your dealer or call us for replacement of missing parts if needed. Installation of the crib is easier with two people.

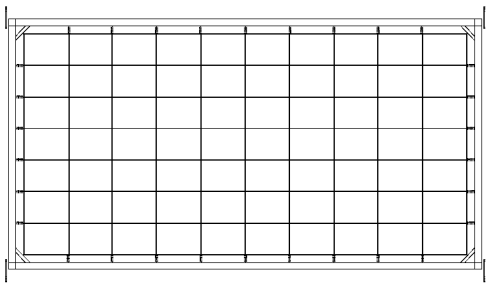

A. Spring Frame

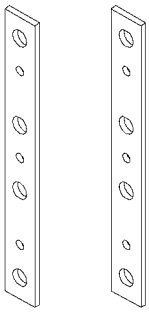

K. Post Brackets
(4 pieces)

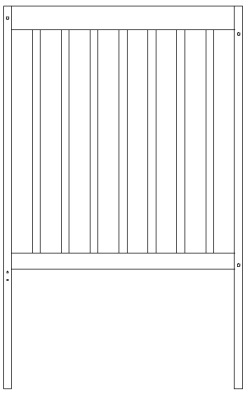

L. Left Headboard

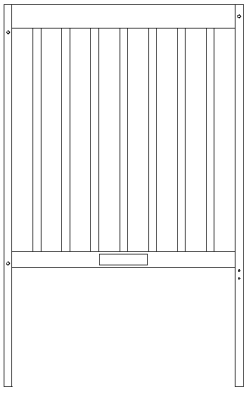

M. Right Headboard

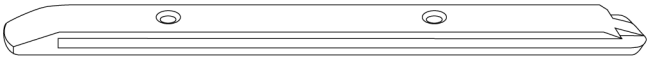

B. Top Bracket Rail (2 pieces)

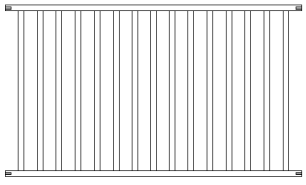

N. Stationary Side (longer)

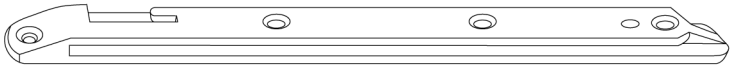

C. Left Bottom Bracket Rail

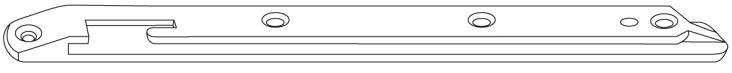

D. Right Bottom Bracket Rail

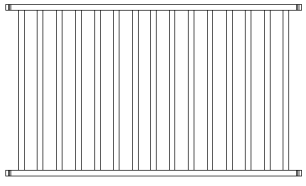

O. Stationary Side (shorter)

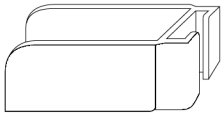

E. Top Rail Shoes
(2 pieces)

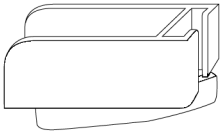

F. Right Bottom
Rail Shoe

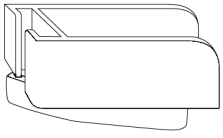

G. Left Bottom
Rail Shoe

P. 1" Wood Screws
(12 pieces)

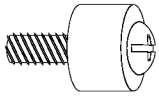

R. Rail Stops (2 pieces)

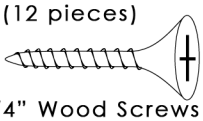

Q. 3/4" Wood Screws
(8 pieces)

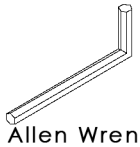

S. Allen Wrench

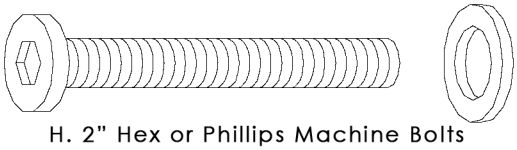

H. 2" Hex or Phillips Machine Bolts
and washers (4 pieces each)
These bolts may vary slightly in length.

*Your crib hardware may not have washers
since some models do not require it.

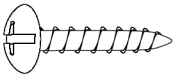

J. 5/8" Wood Screw
(12 pieces)

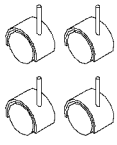

T. Casters

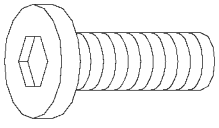

U. Allen Head Bolts
(4 pieces)

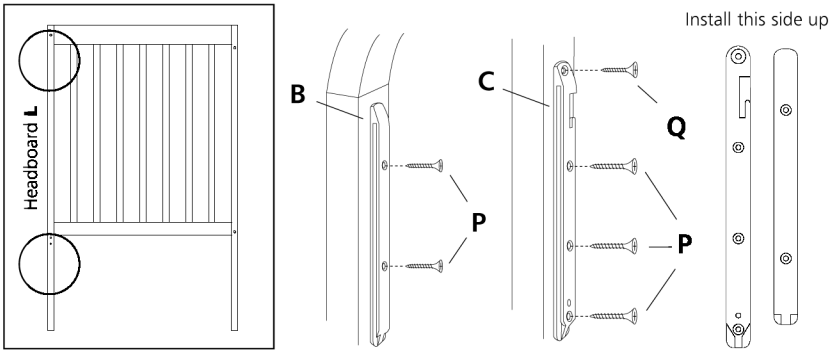

1 Use 2 screws P to fasten top bracket rail B to the left side areas of headboard L as shown to the left. Headboard L has the pre-drilled holes to the left side of it.

Attach left bottom bracket rail C to the bottom left side area of headboard L. Use 1 screw Q for the top-most hole and use 3 screws P for the bottom three holes. Make sure you line up the bottom hole of bracket C with the bottom-most pre-drilled hole on the headboard.

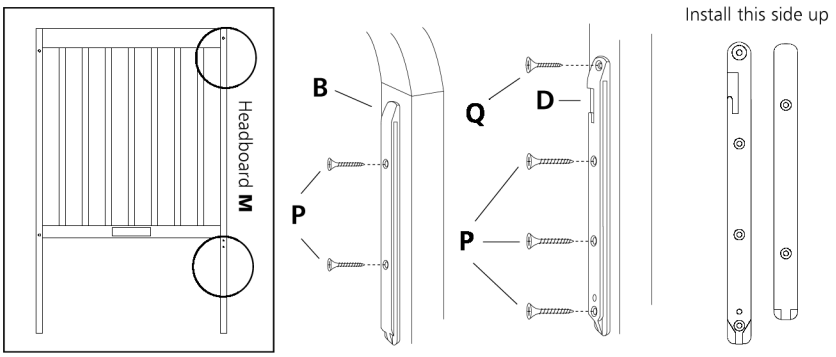

2 Use 2 screws P to fasten top bracket rail B to the top right side areas of headboard M as shown to the left. Headboard M has the pre-drilled holes to the right side of it.

Attach right bottom bracket rail D to the bottom drop side area of headboard M. Use 1 wood screw Q for the top-most hole and use 3 wood screws P for the bottom three holes. Make sure you line up the bottom hole of bracket D with the bottom-most pre-drilled hole on the headboard.

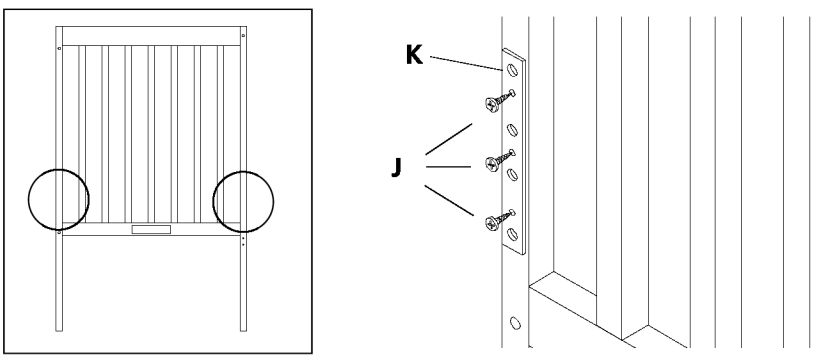

3 Attach the 2 post brackets K to each mid-section of headboards L & M. Use three 5/8" wood screws J for each headboard.

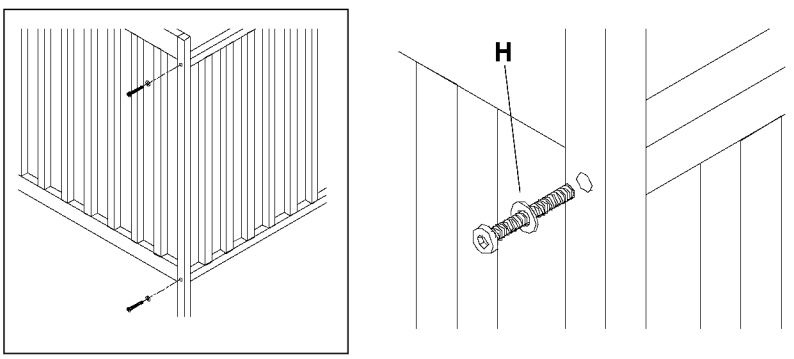

4 Attach the stationary side N (the longer one of the crib sides) to one of the headboards using two 2" machine bolts/washers H using Allen wrench S. If you have the Phillips version H, use a phillips head screwdriver. Attach the other headboard to the stationary side in the same manner.

*Your crib hardware may not have washers since some models do not require it.

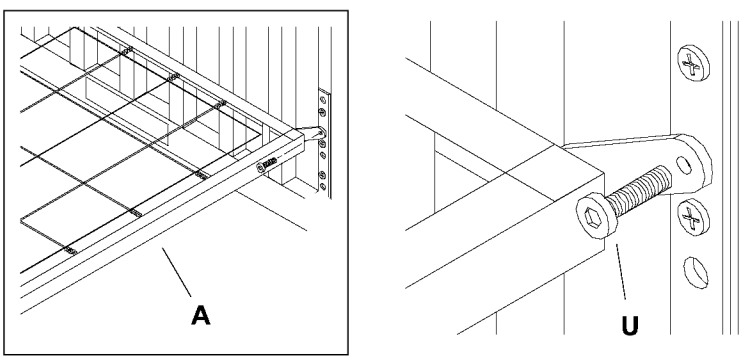

5 Swing out four hangers at the corners of spring frame A. Attach spring frame FLAT SIDE UP. Choose the height of the spring frame. Start at the highest level and adjust accordingly.

Bolt the spring frame A to the brackets using Allen head bolts U and Allen wrench F. As the child grows, it is important to lower the spring.

MAKE SURE THE SPRING FRAME IS LEVEL.

6 Attach top rail shoe E to the top left edge of the drop side by fastening it with two wood screws Q into pre-drilled holes.

Attach bottom rail shoe G to the left bottom left edge of the drop side by fastening it with wood screw Q and wood screw P. Use wood screw P for the mid-section

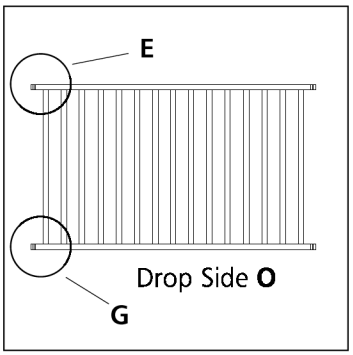

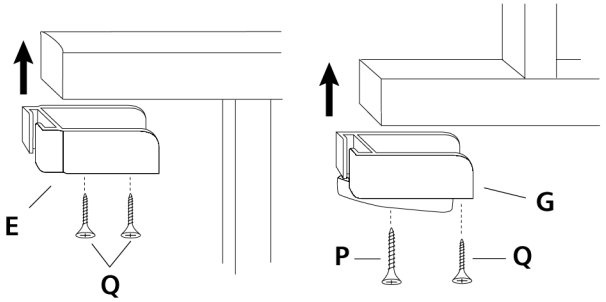

7 Attach top rail shoe E to the top right edge of the drop side by fastening it with two wood screws Q.

Attach bottom rail shoe F to the bottom right edge of the drop side by fastening it with wood screw Q and wood screw P. Use wood screw P for the mid-section.

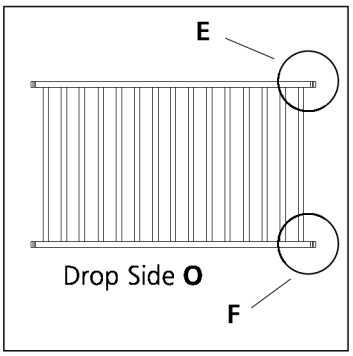

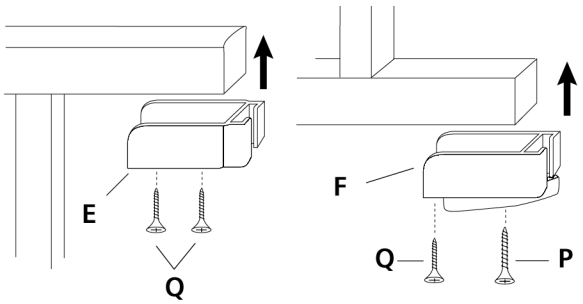

8 Line up the drop side with the installed rail shoes with the bracket rails as shown with in Figure 8A and Figure 8B.

Pull the release tab outwards on both bottom rail shoes F and G before you slide the drop side upwards as shown in Figure 8B. Pull the drop side up until it locks.

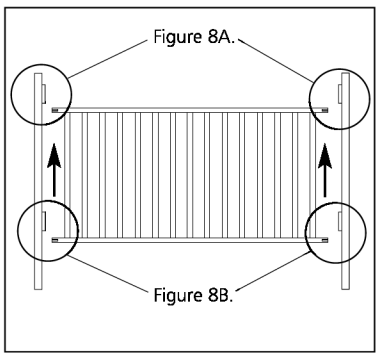

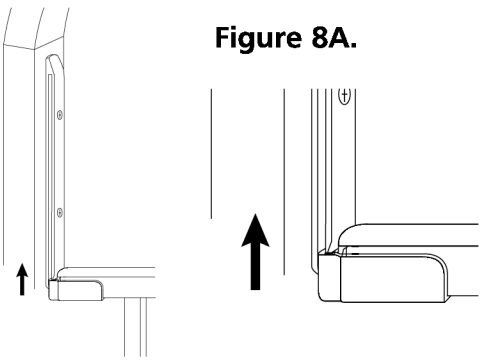

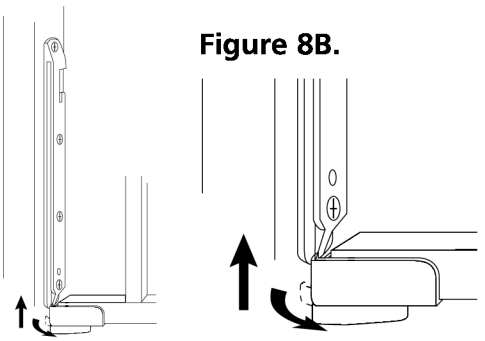

9 Install rail stops R into both bottom bracket rails B and C. Do not overtighten.

Insert casters T into sockets on the bottom of the corner posts and press firmly until casters snap into place. Be sure casters turn freely.

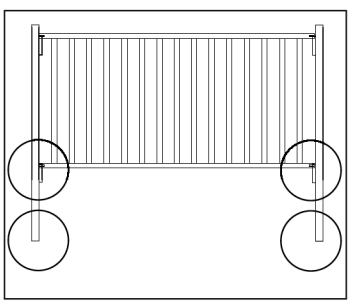

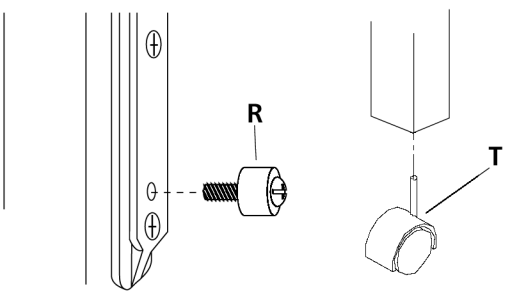

10 To lower the drop side: Lift the drop side up and push in the bottom edge to unlock. Then gently push the drop side down and it will release.

Before using your crib, please read all cautionary statements on the back of this instruction manual. Thank you for purchasing a Million Dollar Baby product.

KEEP THIS MANUAL IN A SAFE PLACE FOR FUTURE REFERENCE.

Please refer to the label (figure below) on the inside face of the headboard. Record the model/item number and serial number of your crib, name of store where you made the purchase, date of purchase and wood finish in the box to the right.

WE WILL ASK YOU FOR YOUR SERIAL NUMBER FOR ALL WARRANTY AND REPLACEMENT PART REQUESTS. PLEASE REFER TO THE BOTTOM OF THIS INSTRUCTION SHEET FOR WARRANTY INFORMATION. KEEP THIS MANUAL IN A SAFE PLACE FOR FUTURE REFERENCE.

SAMPLE LABEL

Item/Model Number: _____

Serial Number: _____

Store Purchased From: _____

Date of Purchase: _____

Wood Finish: _____

WARNING:

Failure to follow these warnings and assembly instructions could result in serious injury or death.

READ ALL INSTRUCTIONS BEFORE ASSEMBLING CRIB. KEEP THE MANUAL FOR FUTURE USE.

⚠ WARNING:

- Strings can cause strangulation! Do not place items with a string around a child's neck, such as hood strings or pacifier cords. Do not suspend strings over a crib or attach strings to toys.
- DO NOT place a crib near a window where cords from blinds or drapes may strangle a child.
- Keep wall decorations, especially those with strings, completely out of child's reach.
- Before each usage or assembly, inspect crib for damaged hardware, loose joints, missing parts or sharp edges. DO NOT use the crib if any parts are missing or broken. Ask your dealer or contact manufacturer for replacement parts and instructional literature if needed. DO NOT substitute parts.
- Check fasteners periodically for tightness. Do not overtighten. This may cause distortion or breakage.
- When a child is able to climb out, reaches the height of 35in. (90 cm) or when the height of the side rail is less than 3/4 of the child's height, the crib shall no longer be used.
- If refinishing, use a non-toxic finish specified for children's products.
- When a child is able to pull to a standing position, set the mattress to the lowest position and remove bumper pads, large toys and other objects that could serve as steps for climbing out.
- Never use plastic shipping bags or other plastic films as mattress covers because they can cause suffocation.
- DO NOT use a water mattress with this crib.
- Replace teething rail(s) if damaged or loose.
- CAUTION: Any mattress used in this crib must be at least 27 1/4 in. by 51 5/8 in. (69cm x 131cm) with a thickness not exceeding 6 in. (15 cm).
- Use a crib as a crib, not as a play pen. Remember that a crib is not a substitute for a parent's supervision.
- Parents should ensure a safe environment for their children by checking the crib regularly before placing the child in the product. ● Please make sure that every component is properly and securely in place.
- When re-assembling the crib for your second child, please keep in mind that the screw hole will need to be filled in order for the screws to grip the wood. Talk to your local hardware store or lumber yard about how to do this properly.

ONE YEAR LIMITED WARRANTY

We will replace any missing parts at the time of purchase or any defective items within a one year period from the date of original purchase. Please keep your receipt so that we may process your warranty request. This warranty only covers new units with original packaging and ownership, and is not transferable. It does not cover any used, secondhand or demo models.

This warranty does not cover any damaged or defective parts tht result from installation and assembly, normal wear and tear, abuse, negligence, improper use or alteration to the finish, design, and hardware of the crib. The specific legal rights of this warranty may vary from state to state. Some states do not allow any exclusion or limitation of incidental or consequential damages. Some states do not allow limitation on hwo long an implied warranty lasts.

Registering your product is even easier than before. You can register your product on our website at www.milliondollarbaby.com.

Care and Cleaning:
Do not scratch or chip the finish. Do not use abrasive chemicals for cleaning. Clean with mild soap on a soft rag. Rinse and dry thoroughly. If you ever refinish this furniture, b e sure you use only a non-toxic finish specified for children's products. If you choose to refinish this furniture, the warranty will be voided.

IF YOU WOULD LIKE TO ORDER A REPLACEMENT OR MISSING PART, PLEASE VISIT US AT:

WWW.MILLIONDOLLARBABY.COM

OR YOU CAN CONTACT US BY MAIL.

MILLION DOLLAR BABY
855 WASHINGTON BLVD.
MONTEBELLO, CA 90640