KS2361,2,5,8CML
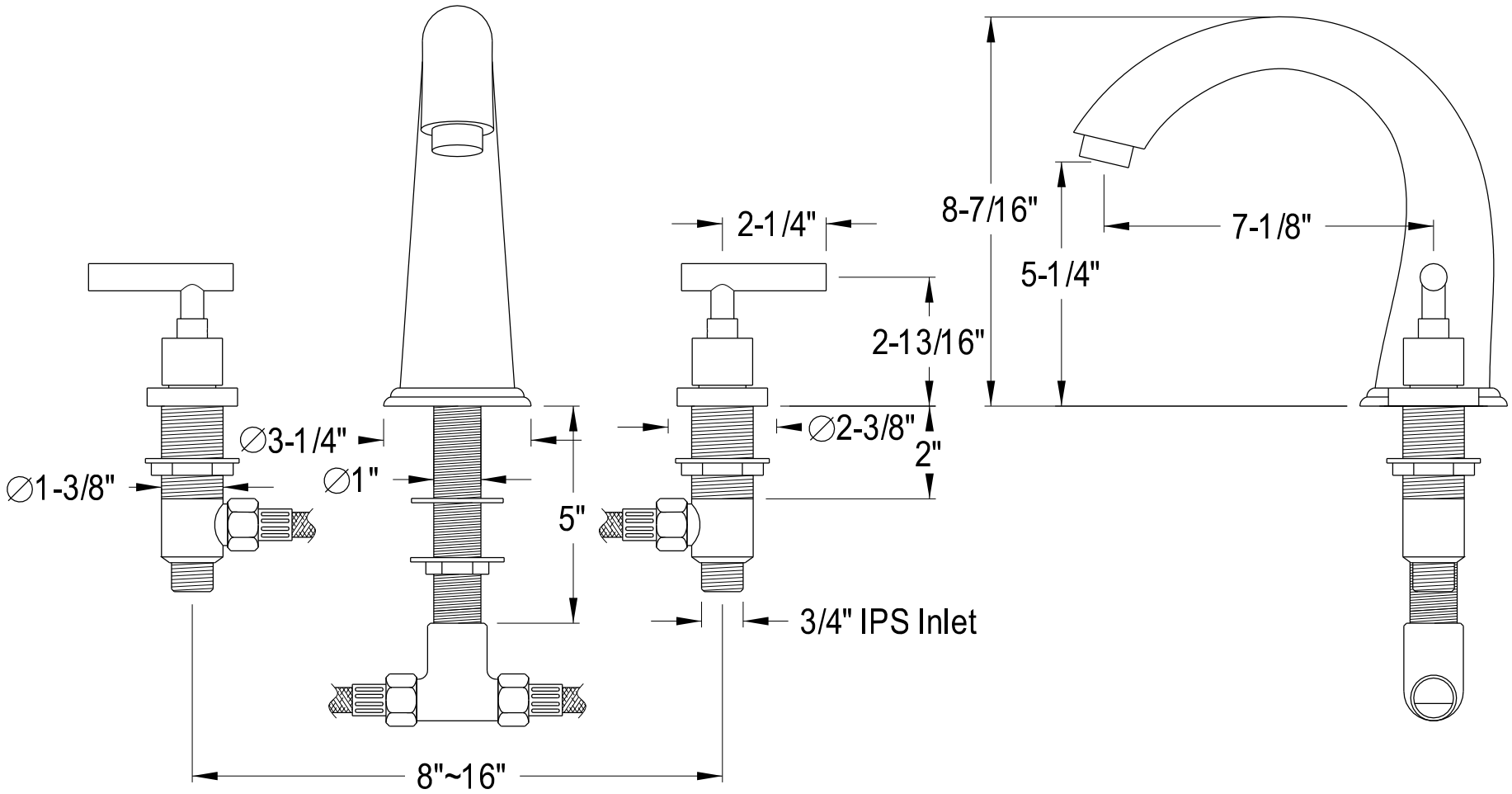
Manhattan Roman Tub Filler With Metal Lever Handle