MODEL#:**ES3812PLBS**
PRODUCT SPECIFICATION SHEET

Elements Of Design

DESCRIPTION:

Widespread Kitchen Faucet W/Brass Sprayer, Pvd

CARTRIDGES (If applicable):

CARTRIDGE TYPE	MODEL #
Hot Cartridge	
Cold Cartridge	
Shared or Single H&C Cartridge	KSRP3891C
Diverter (If applicable)	

Note: Please always check with Elements of Design Customer Service for Cartridge Model Number Verification before you order.

Note: Photo above and Drawing below shows overall style of the product, handle styles may be different to the product model number this specification sheet is refering to.

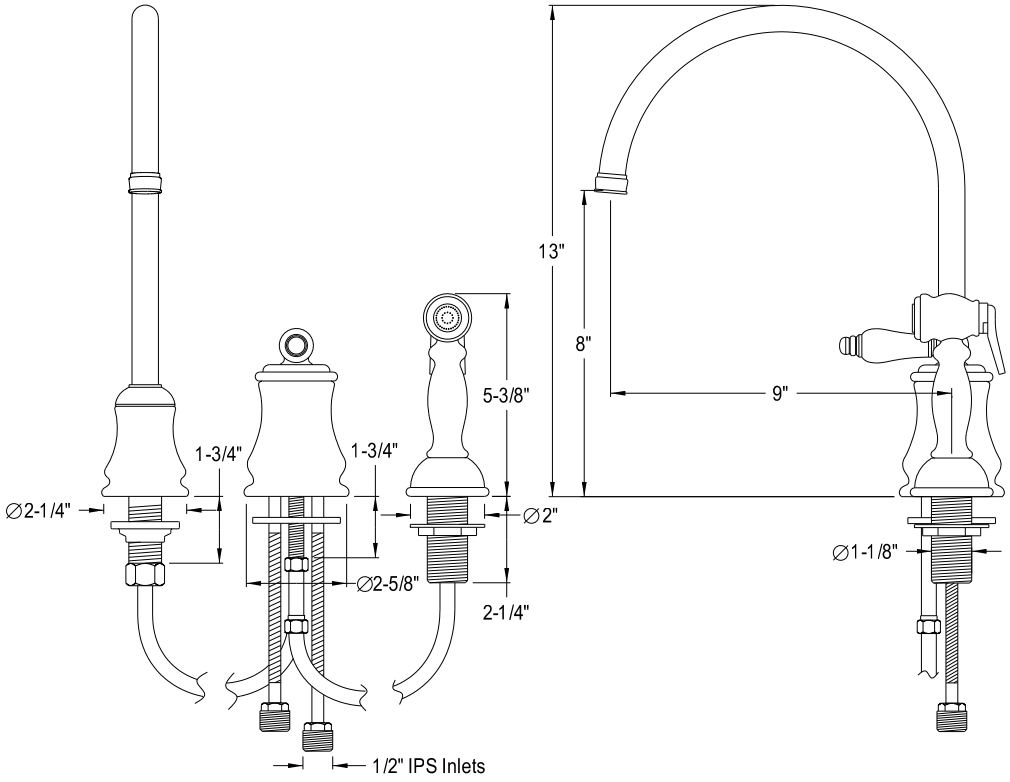

T 909.465.6687 F 909.548.0668