INSTALLATION INSTRUCTION CH-1

For Chandelier Light Fixtures (Rev.07-02-07)

WARNING! SHUT POWER OFF AT FUSE OR CIRCUIT BREAKER

HANGING THE FIXTURE (Fig.1)

1. Shut off the power at the circuit breaker and remove old fixture from ceiling, including the old crossbar.
2. Carefully unpack new fixture and lay all the parts on a clear surface.
3. Thread nipple (C) into loop (F) until snug.
4. Thread other end of nipple (C) with loop attached into crossbar (D) until snug.
5. Place lock washer (B) over of nipple protruding through crossbar and thread hex nuts (A) onto nipple until tight.
6. Take this crossbar assembly and mount to ceiling junction box with junction box screws (E) .Tighten screw securely with screwdriver.
7. Use a pair of pliers to open one end link (I) of the chain provided, and connect to the fixture loop (J). Close the link.
8. By measuring, determine correct number of links needed for proper hanging height. Using pliers disconnect and discard remaining chain.
9. Lace the fixture wires through the chain.
10. Slip loop collar (H) over the chain, then do the same with the canopy (G).
11. Open the other end link (I) of the chain and hang the fixture on the loop at the ceiling. Close the link.
12. Feed the fixture wires through the loop (F), and nipple (C) and pull until taut.

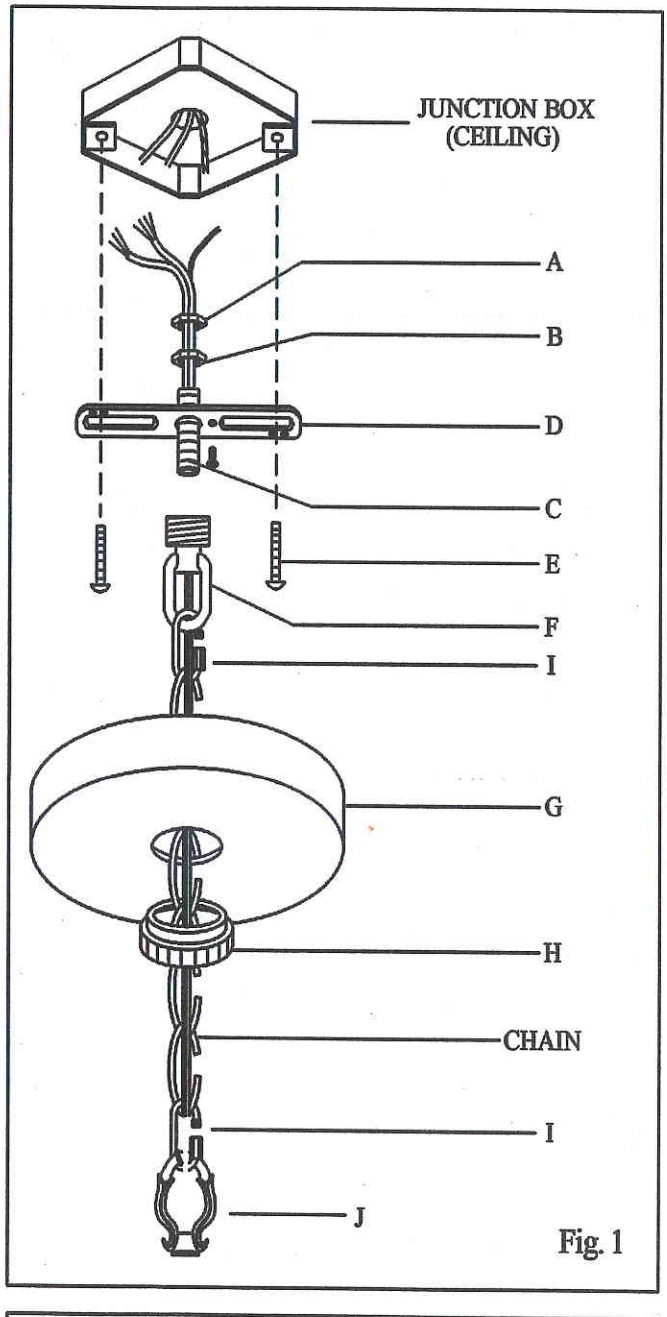

Fig. 1

CONNECTING THE WIRES (Fig.2)

13. Take the black wire from the ceiling junction box and the smooth wire leg from the fixture and twist bare ends together. Twist wire connector onto end of wires until snug.
14. Repeat same process with white junction box wire and ribbed wire of fixture.
    NOTE: Twist wires together in the same direction you twist the wire connector onto wires.
15. If your junction box has a grounding wire (green or bare copper), attach this wire and the bare copper wire from the fixture together as in step 13. If junction box has no ground wire, attach the bare copper fixture wire to the junction box with a screw.
16. Tuck these wire connections neatly into the ceiling outlet box and then raise the canopy (G) all the way to the ceiling. Raise the loop collar (H) and thread onto ceiling loop protruding through canopy.
17. Install the light bulbs in accordance with the fixtures specifications.
    NOTE: DO NOT EXCEED THE SPECIFIED WATTAGE.
    Your installation is now complete. Turn power on at

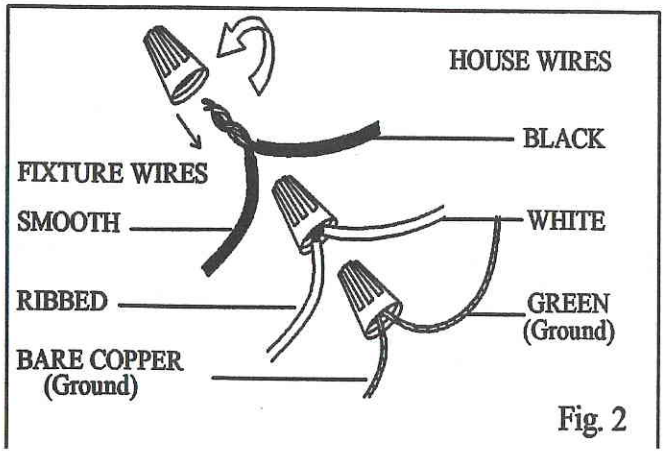

Fig. 2

INSTALLATION INSTRUCTION SF-1

For Semi-Flush Light Fixtures

WARNING! SHUT POWER OFF AT FUSE OR CIRCUIT BREAKER

INSTALLATION THE FIXTURE (Fig.1&2)

1. Shut off the power at the circuit breaker and remove old fixture from ceiling, including the old crossbar.
2. Carefully unpack new fixture and lay all the parts on a clear surface.
3. (Fig. 1) Attach the fixture screws to the mounting strap, or universal mounting plate (whichever is provided).

   (Fig. 2) If the fixture uses a single 1/8" IPS nipple for mounting, thread the 1/8" IPS hex nut and lock washer onto the nipple, and screw the nipple into the mounting strap, without tightening the hex nut.
4. Pull the house wires out from the outlet box, and mount the mounting strap or the universal mounting plate to the outlet box, using box screws.

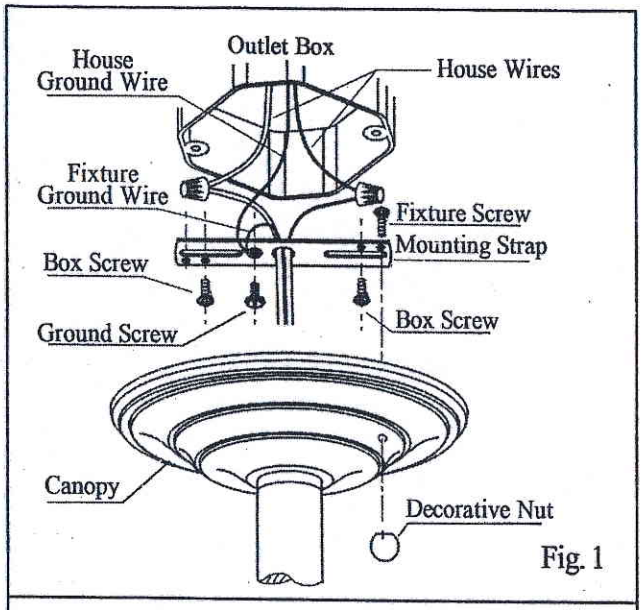

Fig. 1

CONNECTING THE WIRES (Fig.3)

5. Take the black wire from the ceiling outlet box and the smooth wire leg from the fixture and twist bare ends together. Twist wire connector onto end of wires until snug.
6. Repeat same process with white outlet box wire and ribbed wire of fixture.
   NOTE: Twist wires together in the same direction you twist the wire connector onto wires.
7. If your outlet box has a grounding wire (green or bare copper), attach this wire and the bare copper wire from the fixture together as in step 5. If outlet box has no ground wire, attach the bare copper fixture wire to the outlet box with a screw.
8. Tuck these wire connections neatly into the ceiling outlet box.
9. Place the canopy on the fixture over the outlet box and onto the fixture screws (or nipple), and adjust the fixture screws (or nipple) until the protrude out from the canopy.
10. Remove the canopy and secure the position of the fixture screws (or nipple) by tightening the hex nut against the mounting strap. Place the canopy back onto the fixture screws (or nipple), and secure into place using the decorative nuts.
11. Install the light bulbs in accordance with the fixtures specifications.
    NOTE: DO NOT EXCEED THE SPECIFIED WATTAGE.

    Your installation is now complete. Turn power on at to the outlet box & test the fixture.

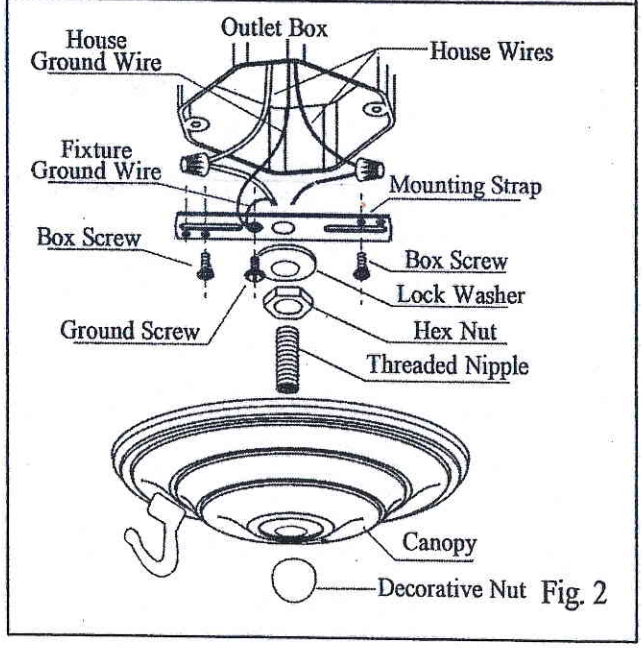

Fig. 2

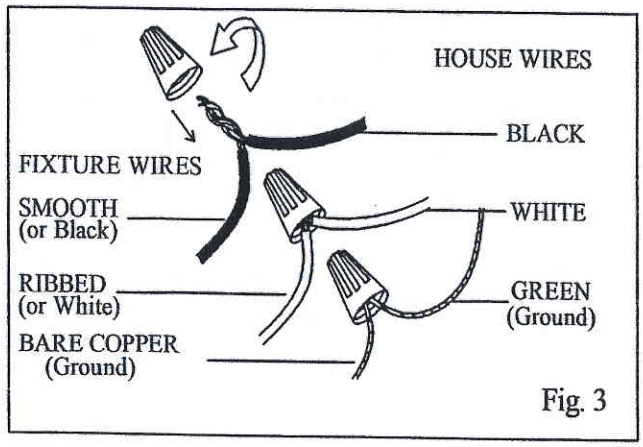

Fig. 3

4002-SF RSB

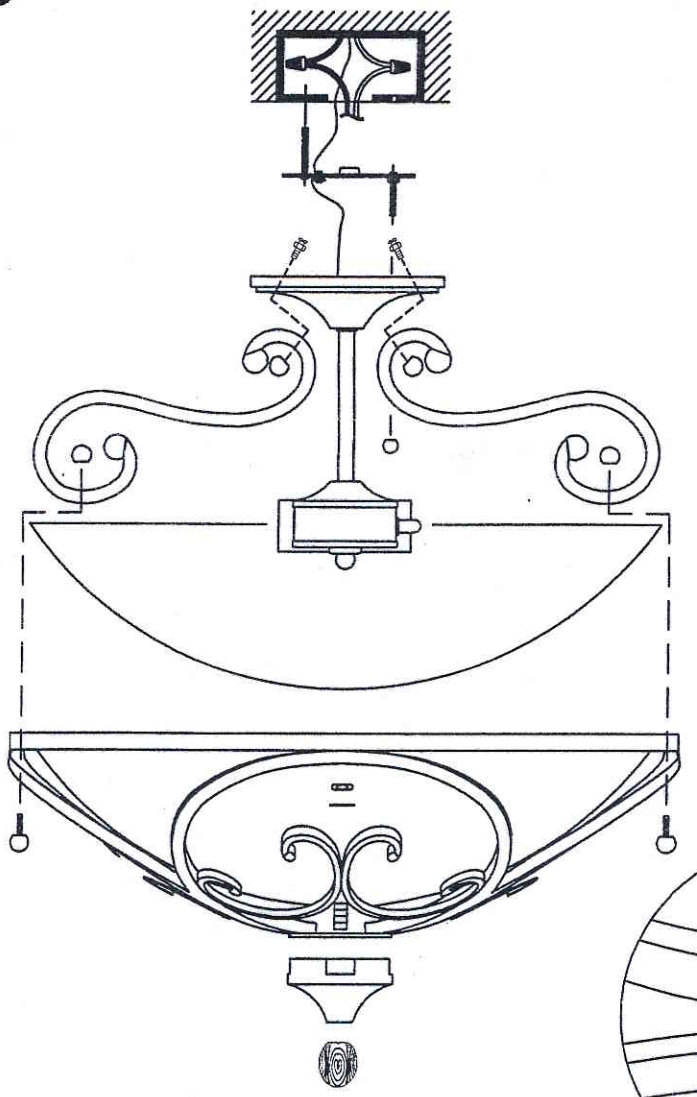

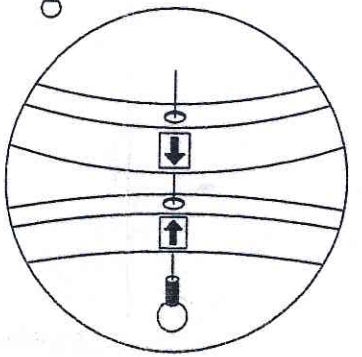

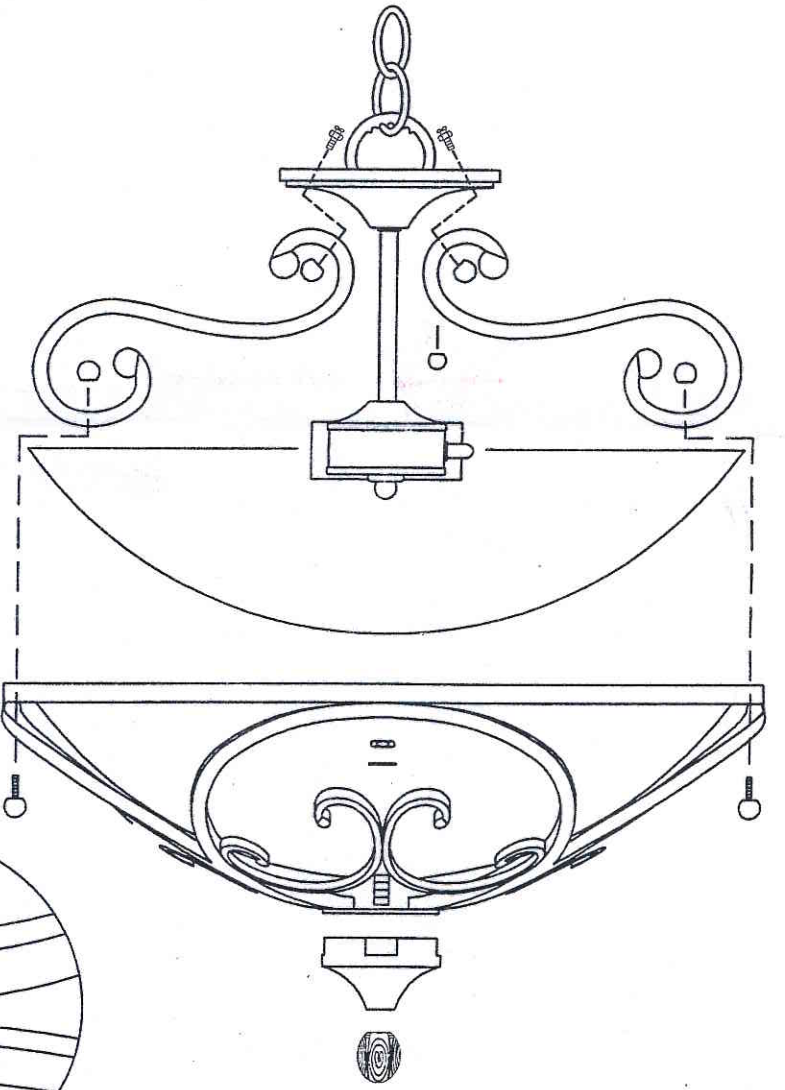

CSA400203LBLG1