INSTALLATION INSTRUCTION CH-1

For Chain Hung Light Fixtures (Rev.02/12/98)

WARNING! SHUT POWER OFF AT FUSE OR CIRCUIT BREAKER

HANGING THE FIXTURE (Fig.1)

1. Shut off the power at the circuit breaker and remove old fixture ftom ceiling, including the old crossbar.
2. Carefully unpack new fixture and lay all the parts on a clear surface.
3. Thread nipple (C) into loop (F) until snug.
4. Thread other end of nipple (C) with loop attached into cross-bar (D) until snug.
5. Place lock washer (B) over of nipple protruding through crossbar and thread hex nut (A) onto nipple until tight.
6. Take this crossbar assembly and mount to ceiling junction box with junction box screws (E) .Tighten screw securely with screwdriver.
7. Use a pair of pliers to open one end link of the chain provided, and connect to the fixture loop (J) . Close the link.
8. By measuring, determine correct number of links needed for proper hanging height. Using pliers, disconnect and discard remaining chain.
9. Lace the fixture wires through the chain.
10. Slip loop collar (H) over the chain, then do the same with the canopy (G).
11. Open the other end link of the chain and hang the fixture on the loop at the celling. Close the link.
12. Feed the fixture wires through the loop (F) , and nipple (C) and
    pull until taut.

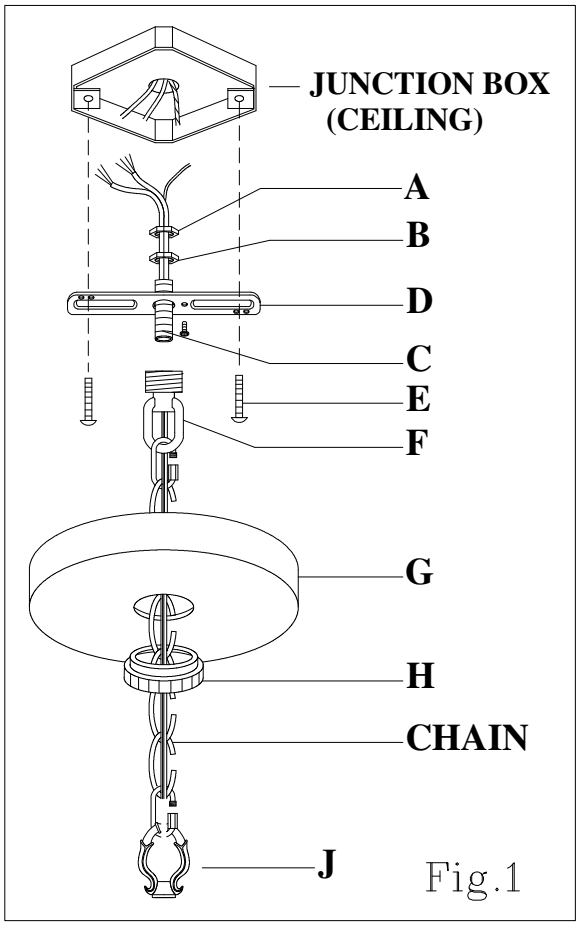

Fig.1

CONNECTING THE WIRES (Fig.2)

13. Take the black wire from the ceiling junction box and the smooth wire leg from the fixture and twist bare ands together.
    Twist wire connector onto end of wires untilsnug.
14. Repeat same process with white junction box wite and ribbed
    wire leg of fixture wire. NOTE: Twist wires together in the Same direction you twist the wire connecto onto wires.
15. If your junction box has a grounding wire (green or bare copper), attach this wire and the bare copper wire from the fixture together as in step 13. If junction box has no ground wire, attach the bare copper fixture wire to the junction box with a screw.
16. Tuck these wire connections neatly into he ceiling outlet box and then raise the canopy (G) all the way to the ceiling. Raise the loop collar (H) and thread onto ceiling loop protruding through canopy.
17. Install the light bulbs in accordance with the fixtures specifications.
    NOTE: DO NOT EXCEED THE SPECIFIED WATTAGE.
    Your installation is now complete. Returm power to the junction box and text the fixture.

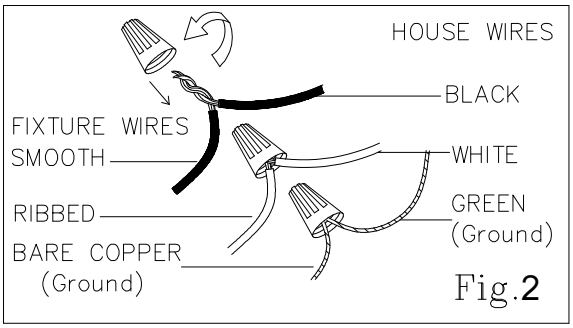

Fig.2
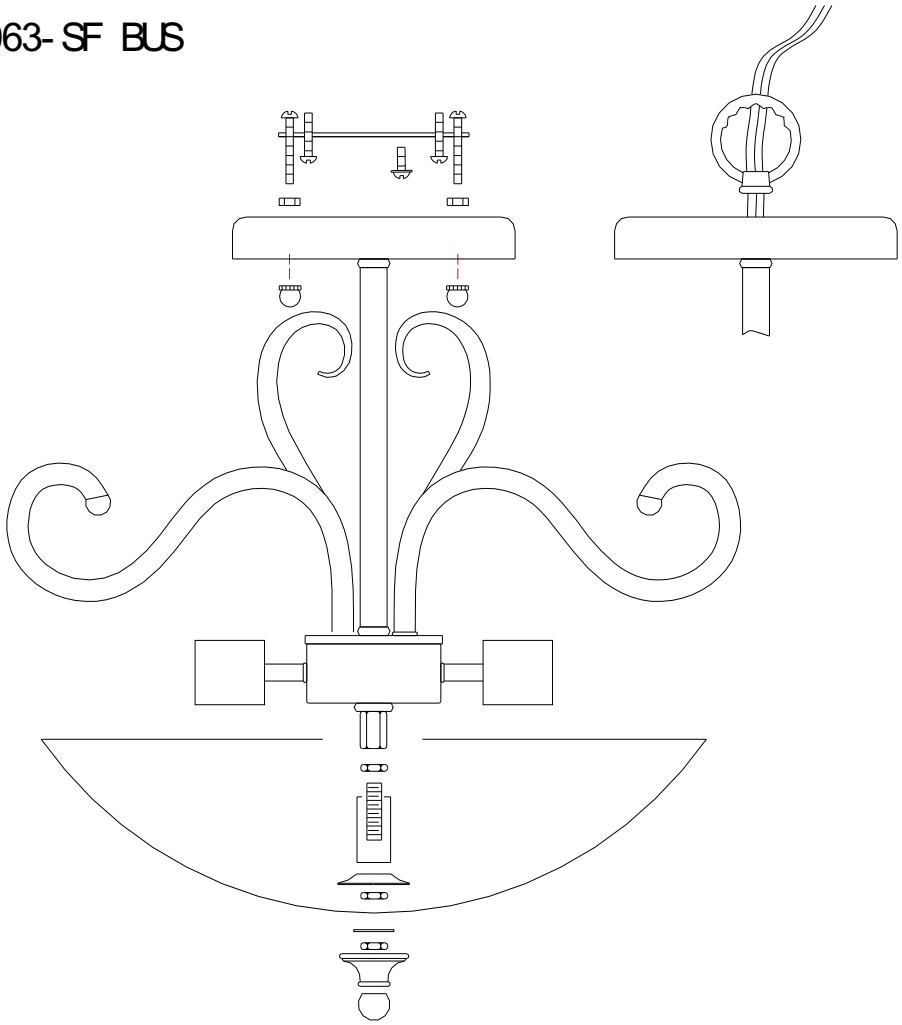
8063-SF BUS