ZANEEN

SPECIFICATION SHEET

AERO PENDANT

Project Name: _____

Fixture Type: _____

Product Code: D1-1048

Style: PENDANT

Diffuser: Red Triplex Blown Glass

Finish: Painted Grey

Lamp: 2 x 75W Medium

Voltage: 120V

Dimensions: W. 17 3/4” x D. 13 3/4” x O.A.H. 52”

Approval: Approved by CSA C US for North American Standards.

Notes: _____

Dimensions

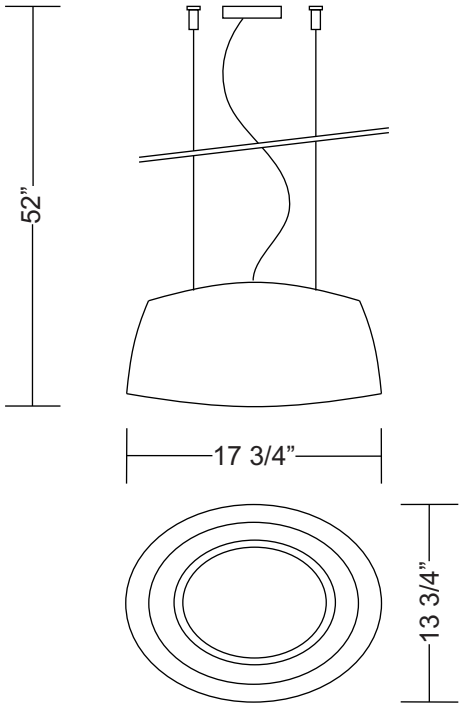

ZANEEN LIGHTING 30 Tycos Drive, Toronto, Ontario, Canada M6B 1V9
PH: 800.388.3382 / 416.247.9221 FAX: 416.247.9319 www.zaneen.com zaneen@zaneen.com