ECR 4 KIDS

San Diego, CA 92110 USA
www.ecr4kids.com

8 Compartment Storage Cabinet

Model# ELR-0421-A

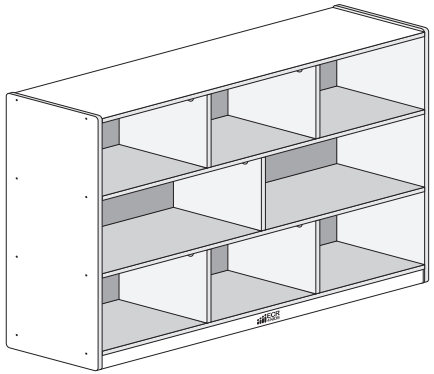

WARNING:

Adult Assembly Required.

Two adults recommended.

- Contains small parts, sharp points and edges.
- Do not stand, sit, kneel, climb, lean or pull on unit for support.
- Never leave children unattended.
- Do not place unit near high heat or moisture.
- Adult supervision recommended.

TOOLS INCLUDED

⬢ Hex Tool (1)

TOOLS NEEDED

✚ Phillips Screwdriver

Parts List

BEFORE ASSEMBLING, MAKE SURE YOU HAVE ALL THE PARTS

A — Left & Right Side Panels (1/1)

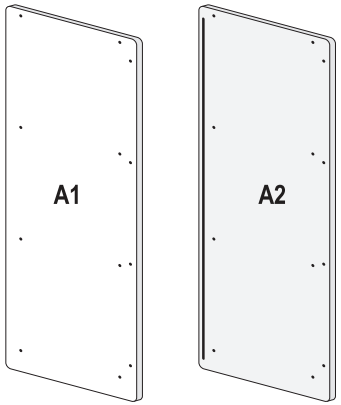

B — Top Panel (1)

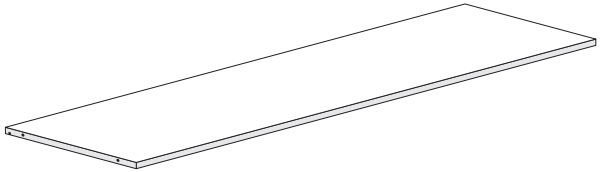

C — Upper Shelf (1)

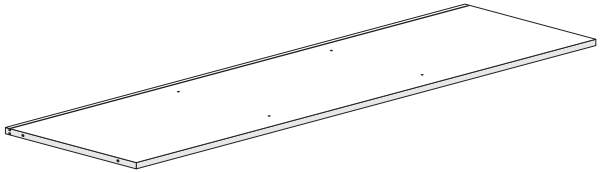

D — Lower Shelf (1)

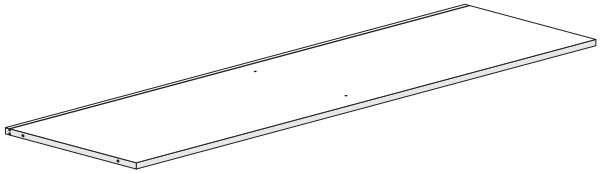

E — Bottom Shelf (1)

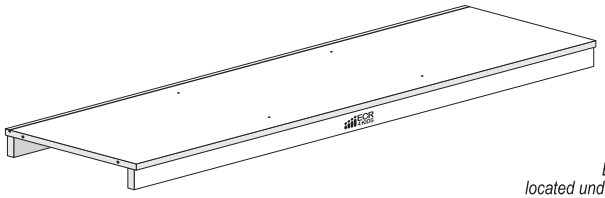

Batch ID located underneath.

F — Back Panels (3)

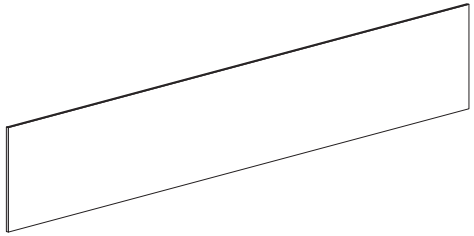

G — Dividers (5)

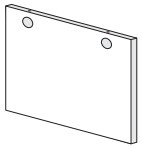

H — Hex Screws (26)

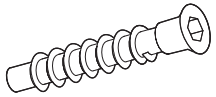

Use the Hex Tool.

I — Cam Posts & Cam Locks (10/10)

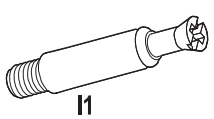

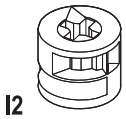

Use a Phillips Screwdriver.

J — Phillips Screws & Casters (16/4)

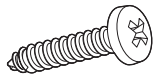

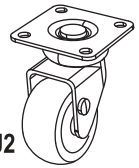

Use a Phillips Screwdriver.

1 Install the Casters onto Bottom Shelf

Install the four **Casters (I2)** into the pre-drilled holes on the underside of the **Bottom Shelf (D)**, with four **Phillips Screws (I1)** per caster, using a Phillips screwdriver.

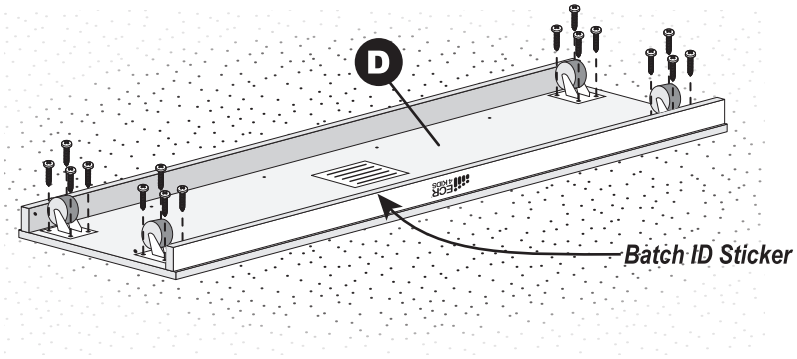

2 Install Upper Dividers to Upper Shelf

Install two **Dividers (G)** on to the **Upper Shelf (C)** with four **Hex Screws (H)** using the Hex Tool.

Note: *The grooves on the Upper Shelf are away from the ground.*

Place two **Cam Locks (I2)** into the recessed holes on each **Divider (G)**, with the arrow facing the closest edge.

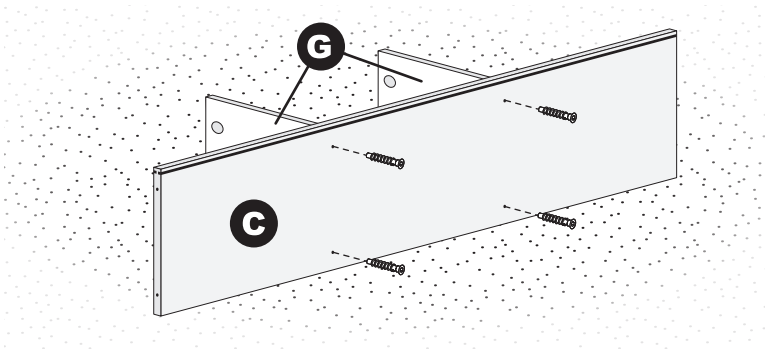

3 Install Middle Divider to Lower Shelf

Install one **Divider (G)** on to the **Lower Shelf (D)** with two **Hex Screws (H)** using the Hex Tool.

Note: *The grooves on the Lower Shelf are away from the ground.*

Place two **Cam Locks (I2)** into the recessed holes on each **Divider (G)**, with the arrow facing the closest edge.

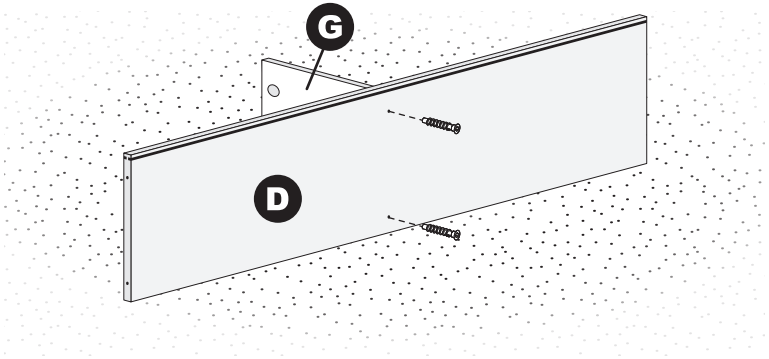

4 Install Lower Dividers to Bottom Shelf

Install two **Dividers (G)** on to the **Bottom Shelf (E)** with four **Hex Screws (H)** using the Hex Tool.

Note: *The groove on the Bottom Shelf is away from the ground.*

Place two **Cam Locks (I2)** into the recessed holes on each **Divider (G)**, with the arrow facing the closest edge.

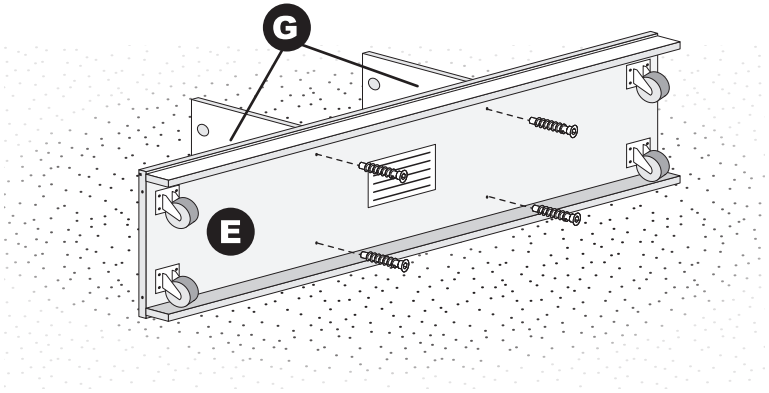

See Next Page

5 Connect Lower Shelf to Lower Dividers

Install four **Cam Posts (I1)** into the threaded plastic inserts on the underside of **Lower Shelf (D)** with a Phillips screwdriver.

Reminder: *Do not overtighten, as the plastic threads can be stripped.*

Insert the **Lower Shelf (D)** Cam Posts into the holes on the top edge of the **Lower Dividers (G)**.

Turn the **Cam Locks (I2)** clockwise with a Phillips screwdriver to lock the **Lower Dividers (G)** onto the posts.

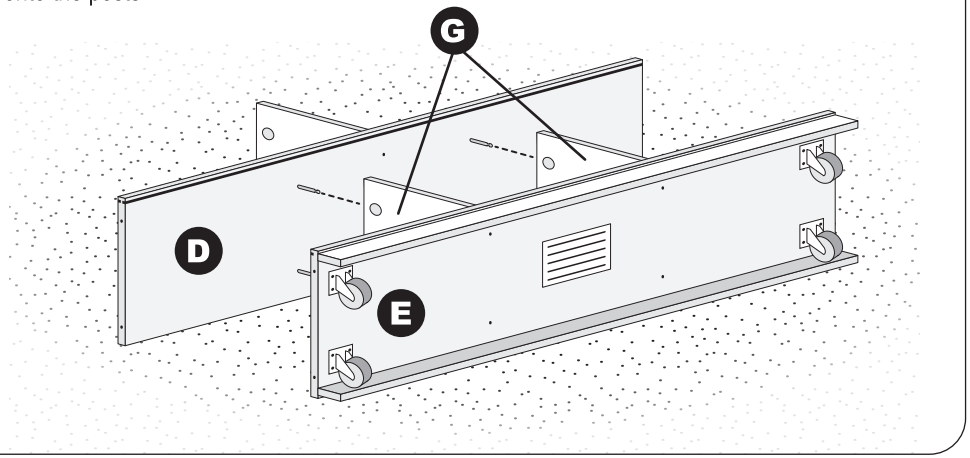

6 Connect Top Panel to Upper Dividers

Install four **Cam Posts (I1)** into the threaded plastic inserts on the underside of **Top Panel (B)** with a Phillips screwdriver.

Reminder: *Do not overtighten, as the plastic threads can be stripped.*

Insert the **Top Panel (B)** Cam Posts into the holes on the top edge of the **Upper Dividers (G)**.

Turn the **Cam Locks (I2)** clockwise with a Phillips screwdriver to lock the **Upper Dividers (G)** onto the posts.

Note: *The groove on the Top Panel is away from the ground.*

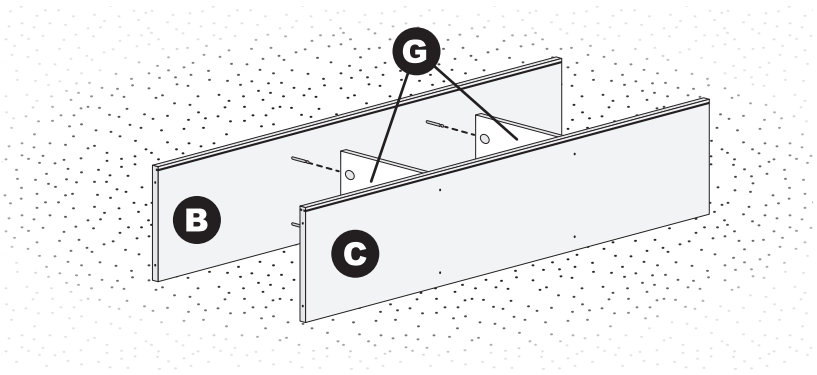

7 Connect Upper Shelf to Middle Divider

Install two **Cam Posts (I1)** into the threaded plastic inserts on the underside of **Upper Shelf (C)** with a Phillips screwdriver.

Reminder: *Do not overtighten, as the plastic threads can be stripped.*

Insert the **Upper Shelf (C)** Cam Posts into the holes on the top edge of the **Middle Divider (G)**.

Turn the **Cam Locks (I2)** clockwise with a Phillips screwdriver to lock the **Middle Divider (G)** onto the posts.

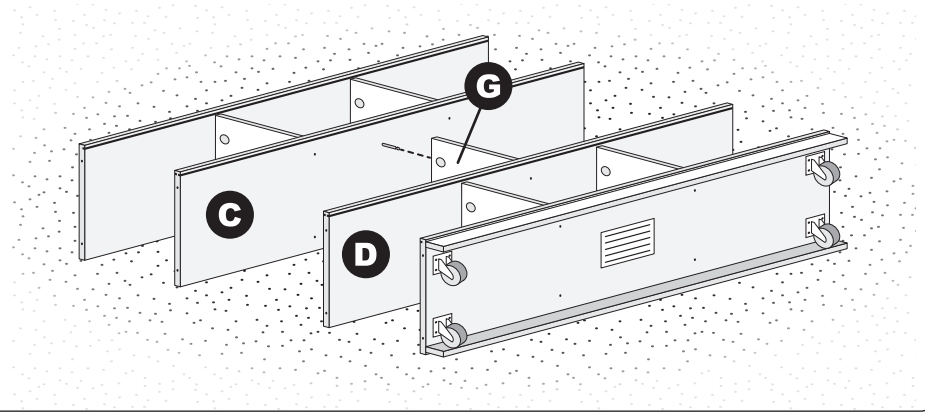

8 Install Right Side Panel

Install the **Right Side Panel (A2)** on to the **Top Panel (B)**, **Upper & Lower Shelves (C, D)** & **Bottom Shelf (E)** with eight **Hex Screws (H)** using the Hex Tool.

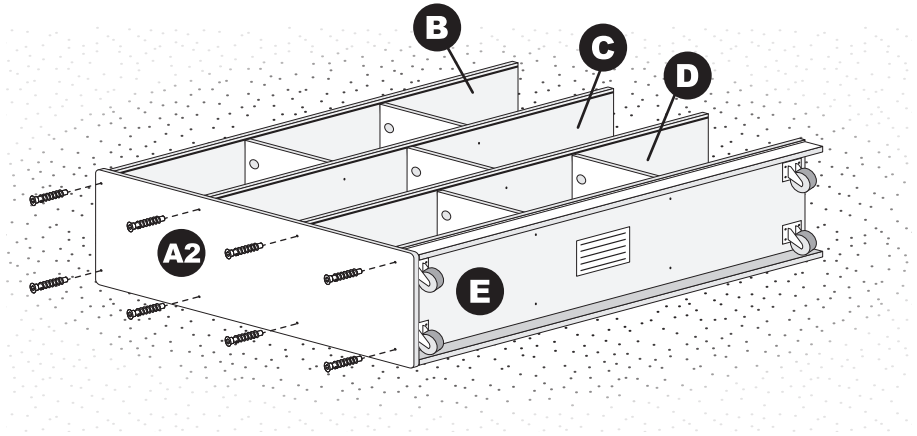

See Next Page

9 Insert the Back Panels

Slide the **Back Panels (F)** into the grooves on the **Top Panel (B)**, **Upper & Lower Shelves (C, D)** & **Bottom Shelf (E)** as shown, until fully seated into the groove on the inside of the **Right Side Panel (A2)**.

Tip: *If the Back Panels do not slide in easily, wiggle the panels while pushing into place.*

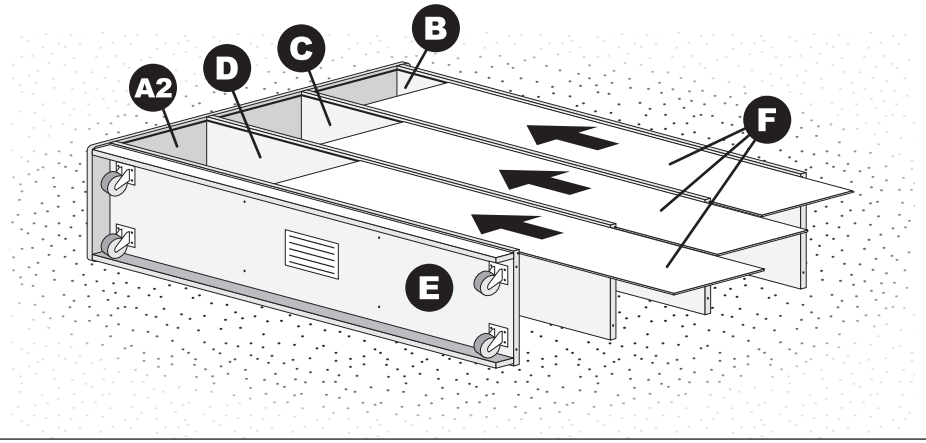

10 Install Left Side Panel

Install the **Left Side Panel (A1)** on to the **Top Panel (B)**, **Upper & Lower Shelves (C, D)** & **Bottom Shelf (E)** with eight **Hex Screws (G)** using the Hex Tool.

Two Adults Recommended: Carefully rotate unit upright.

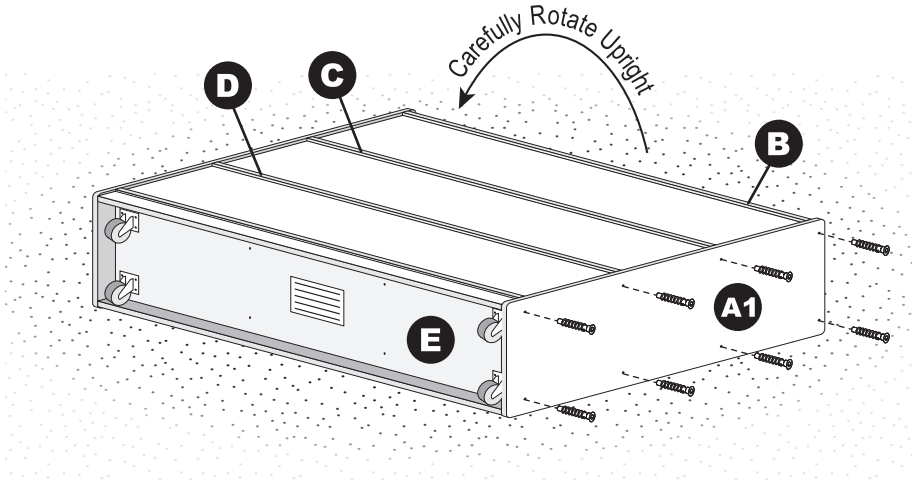

We appreciate your purchase of the 8 Compartment Storage Cabinet. ECR4KIDS has made every effort to supply a quality product that with proper use and care, will provide many years of trouble-free use.

If you experience any difficulties with this product, please email us at **ecrcs@ecr4kids.com** or call toll-free at (855) ECR-4KIDS (Monday - Friday, 7:00am - 4:00pm Pacific Standard Time)

Please do not return to place of purchase as ECR4KIDS will replace defective part(s) and/or product.

Warranty: Visit our website for product specific warranty information at: www.ecr4kids.com

Care and Cleaning

Clean wood with a damp cloth or sponge using warm water and mild soap. Wipe dry.

Do not place near heat, moisture or vaporizer which may cause wood to warp and peel.

Check for loose or worn parts periodically and tighten or replace as necessary.

Record the manufacture date here. Information is located on the Batch ID sticker and on the shipping carton. Save this sheet in an accessible place.

Model Number: ELR-0421-A

Factory Code: EP

Manufacture Date: _____

Batch ID Number: _____
(Located on Part E)

©2013 ECR4KIDS, LP

Version: ELR-0421-A_EP_2013.04.01