JULIEN

Donnez vie à vos idées.
Make your ideas real.

SPECIFICATIONS

Category: **Kitchen sinks**

Type: **Undermount Double Bowl**

Collection: **Trapezoid**

MODEL: 005 005

FEATURES:

- Handcrafted in Canada using recycled American stainless steel
- Commercial grade - 16 ga material thickness
- Corrosion resistant 304 series stainless steel (18/10)
- Elegant no. 4 brushed finish (appliance finish)
- Highly efficient sound deadening pads
- Eye catching design maximising cabinet space usage
- Trapeze geometry for increased space efficiency
- Practical flat sink bottom and straight bowl sides
- Stylish and functional bowl bottom grooves
- Offset 3-1/2" drain placement
- Limited lifetime warranty

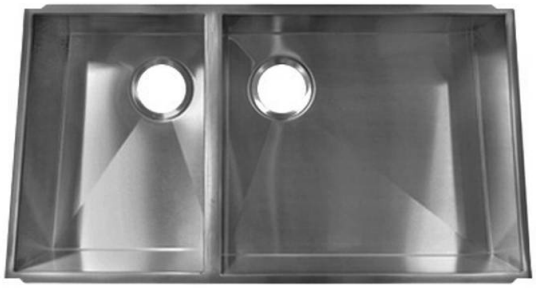

STANDARDS COMPLIANCE:

- ASME A112.19.3
- CSA B45.0-02
- CSA B45.4-02

OPTIONAL ACCESSORIES:

- Grid	LG #200185	SM #200186
- Colander	#205008	
- Cutting board	#210036	

SINK DIMENSIONS:

Model	Overall	Bowl (s)	Depth	Recommended Cabinet size
005 005	34 1/3 x 17 1/2	LH 13 1/8 x 16 RH 19 1/8 x 16	8 8	36

- All dimensions are in inches
- Cutout template supplied with every sink and available on our web site

WARRANTY:

Julien inc. offers a LIMITED LIFETIME WARRANTY on the [fix] components of its stainless steel sinks against defects of material and workmanship. For further details on our product warranty, please refer to our catalog or Web site.

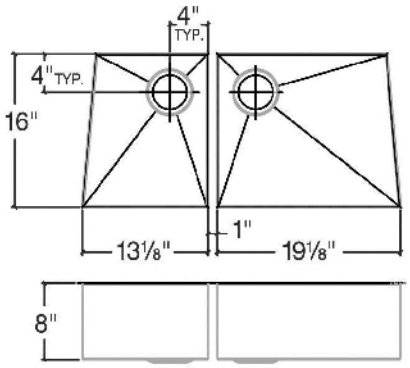

PRODUCT SPECIFICATIONS:

Sink type to be undermount double bowl. Sink to be handcrafted from a single sheet of 16 ga stainless steel having 18/10 chrome/nickel content and a no.4 brushed finish. Sink to feature bowl bottom grooves, rear Ø3 1/2" drain placement and sound insulation pads. Sink overall dimensions to be 34 1/3" left-to-right and 17 1/2" front to back. LH bowl dimensions to be 13 1/8" left-to-right and 16" front to back. RH bowl dimensions to be 19 1/8" left-to-right and 16" front to back. Sink to feature 0mm radius corners. Sink to be Julien Trapezoid collection model no. 005 005 with bowl depth of 8" on LH bowl and 8" on RH bowl.

PROJECT/JOB INFORMATION:

Project/Job name: _____

Specifier: _____

Contractor: _____

This specification is subject to change without notice. Julien assumes no responsibility for the use of superseded or voided specifications.

JULIEN Inc. 935, Lachance St., Quebec (QC), Canada
Phone : 1.866.901.5624 Fax : 1.866.397.9090
www.julien.ca