IN

RIZZ
05-1822-AF-AF

Design by Ramon Valls

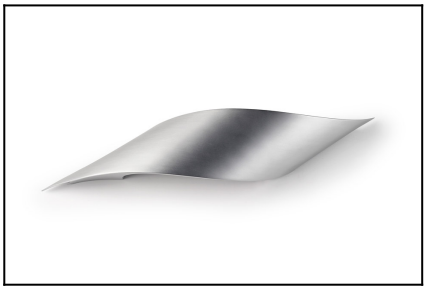

The photograph may not match the reference exactly. Please read the product description to identify the finish.

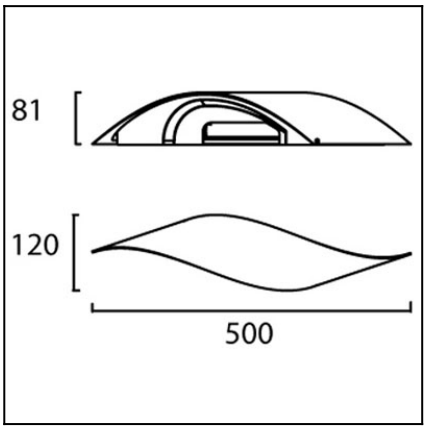

Download photometric file .ldt /.ies

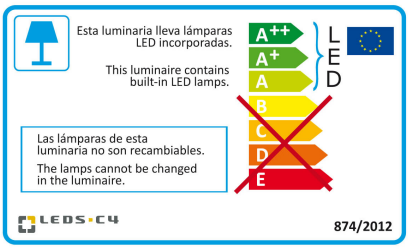

Click on image to download energy label

TECHNICAL CHARACTERISTICS

Type:	Wall fixture
IP Protection degrees:	IP20
Light source 1:	10 x LED Cree 10W Warm White - 3000K 850 lm(N) CRI 80
Total power consumption (W):	12.9
Voltage / Frequency:	110-240V/50-60Hz
Warranty (Years):	2
Option to extend the guarantee (Years):	5
Units per box:	6
Net Weight (Kg):	0.875
EAN:	8435381410636

MATERIALS / FINISHES

Structure material:	Aluminium	**Diffuser material:**	Methacrylate
Structure finish:	Satin	**Diffuser finish:**	Tinted

GEAR

Multi-voltage electronic gear included (110-240 V / 50-60 Hz)

Lm(N): Nominal flow of light in actual working conditions. Its actual flow will depend on the environmental conditions and the efficiency of the optics and/or diffuser.

Leds-c4 reserves the right to make the necessary technical changes they deem adequate, in order to improve the features of the product.
Please consult the sales team to clarify any doubt.

(+34) 973 468 100
leds-c4@leds-c4.com
www.leds-c4.com

Luminaire		Measurem.		Lamp	
Code	05-1822-AF-AF	Code	05-1822-AF-AF	Code	05-1822-BW-BW
Name	Aplique 10 led x1W CREE blanco	Name	Aplique 10 led x1W CREE blanco	Number	1
Line	Eulumdat	Date	30-06-2014	Position	

Efficiency	100.00%	Coordinate system	CG	Total Flux	725.02 lm
Maximum value	188.54 cd	Position	C=90.00 G=5.00	Asymmetrical	

Rectangular Luminaire	Length	81 mm	Width	500 mm	Height	120 mm	
Rectangular Luminous Area	Length	25 mm	Width	130 mm	Height	120 mm	

Horizontal Luminous Area	0.003250 m2	Emitting area on Plane 180°	0.003000 m2
Emitting area on Plane 0°	0.003000 m2	Emitting area on Plane 270°	0.015600 m2
Emitting area on Plane 90°	0.015600 m2	Glare area at 76°	0.003697 m2

Symmetry Type	Asymmetrical	Maximum Gamma Angle	180
Measurement Distance	0.00	Measurement Flux	725.02 lm

Operator	Asselum T2	Source voltage	
Temperature	25.00 °C	Source current	
Humidity	60.00 %	Photocell	
Notes			

Luminaire Lamps

Line	Code	Name	Flux [lm]	Pow. [W]	Q.ty
Eulumdat	05-1822-BW-BW	05-1822-BW-BW - 10.00 W	725.02	10.00	1

C.I.E.	59 86 96 50 100	D DIN 5040	C41
F UTE	0.50 D + 0.50 T	B NBN	BZ 3 / 4 / BZ 4

81mm x 500mm

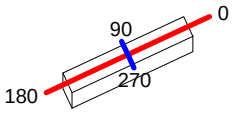

C Halfplanes

180.0 — 0.0

270.0 — 90.0

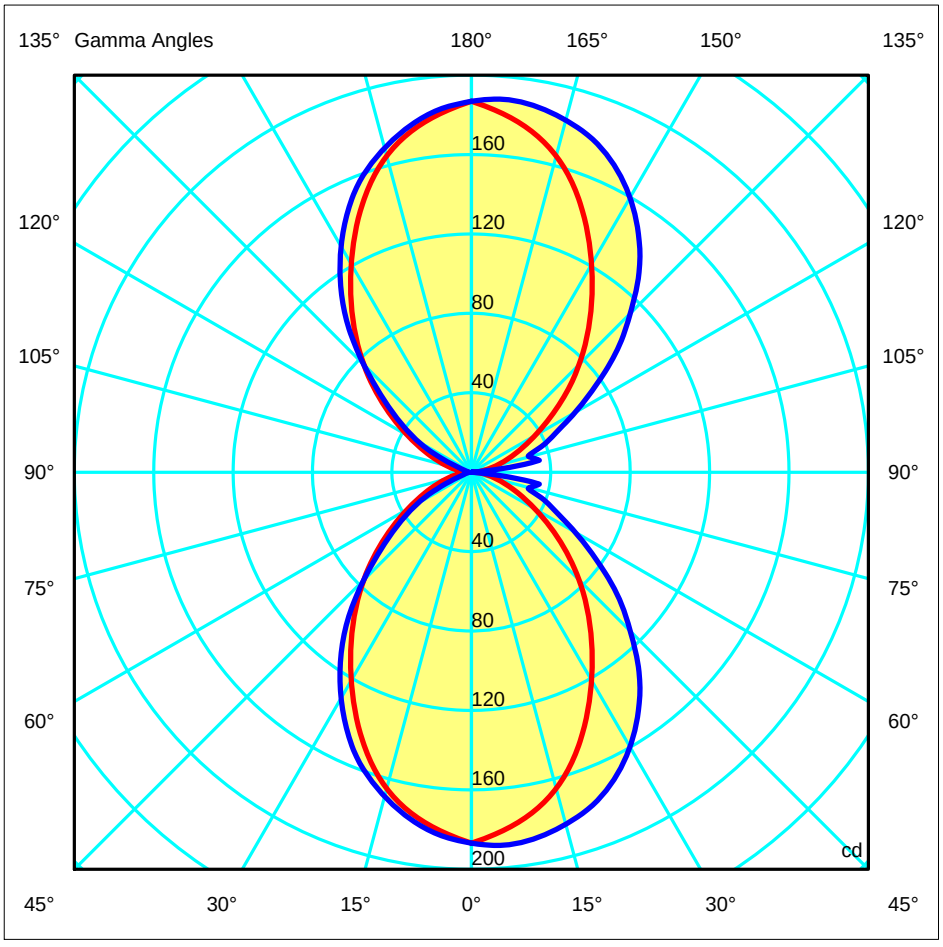

ULOR	50.00 %
DLOR	50.00 %
RN	50.00 %

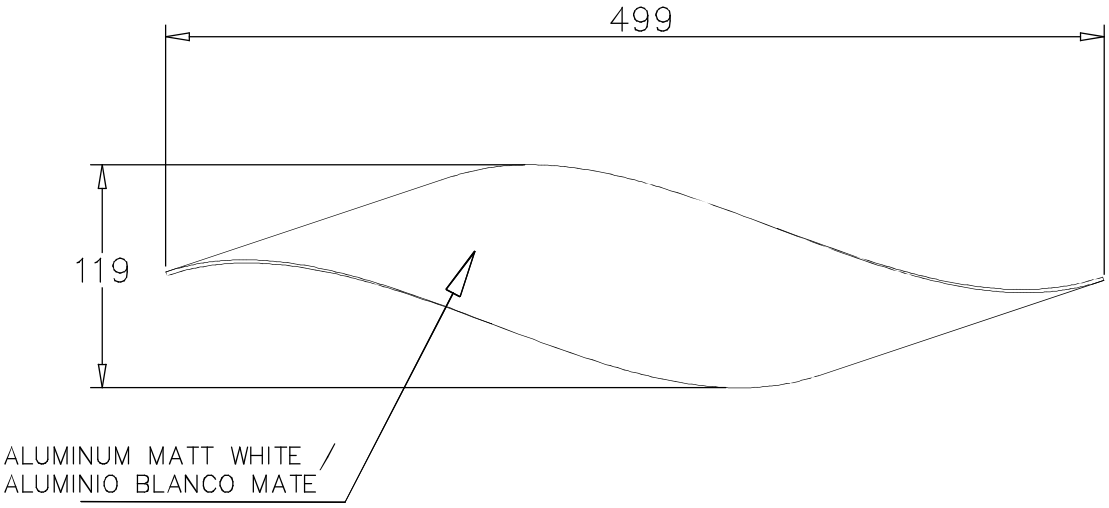
499
119
ALUMINUM MATT WHITE /
ALUMINIO BLANCO MATE

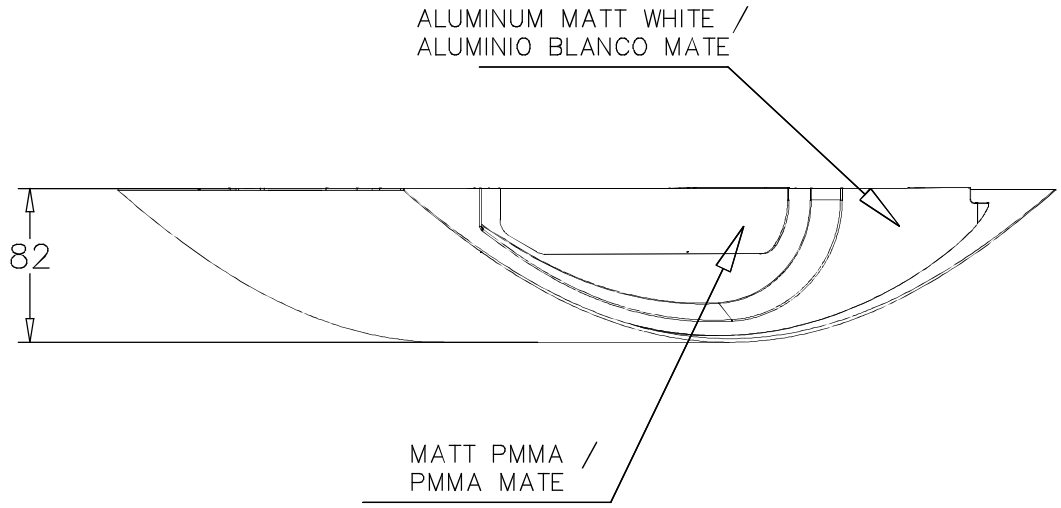
ALUMINUM MATT WHITE /
ALUMINIO BLANCO MATE
82
MATT PMMA /
PMMA MATE

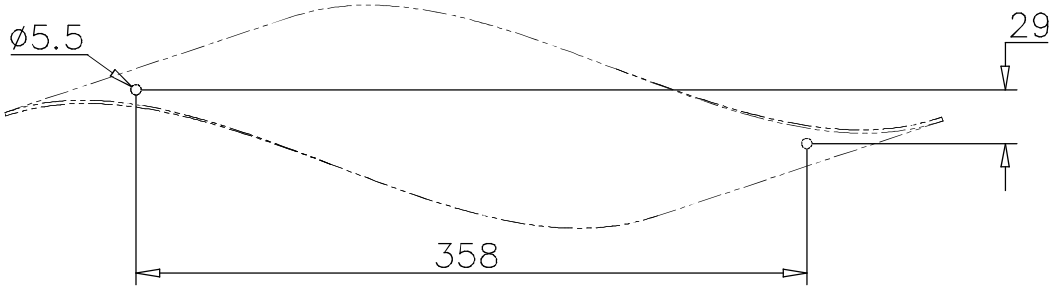
ø5.5
29
358

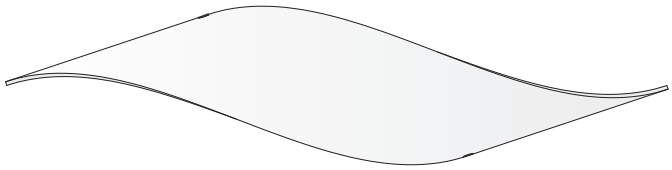

1

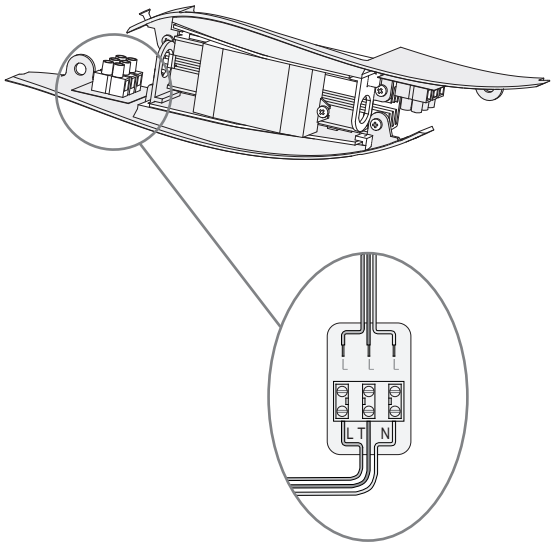

2

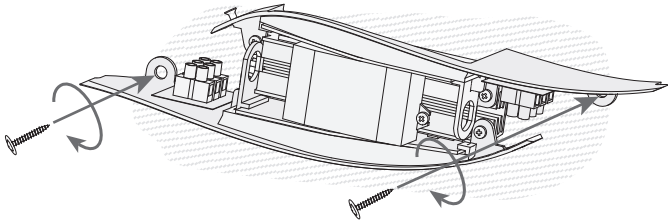

3

3.1

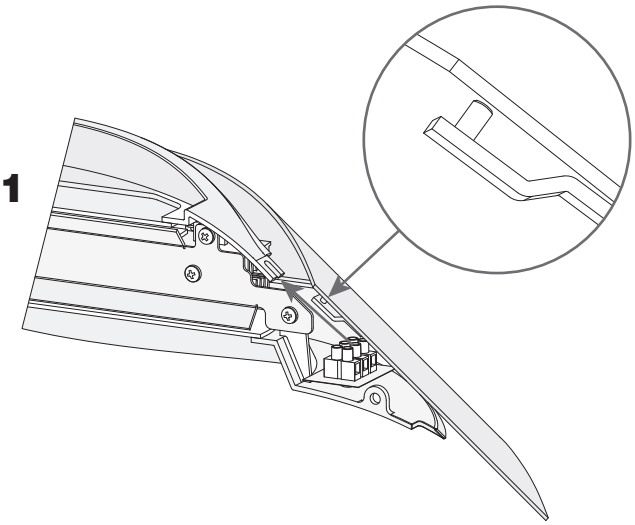

3.2

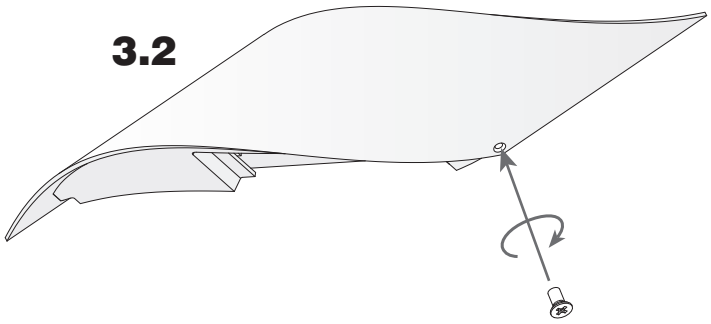

4

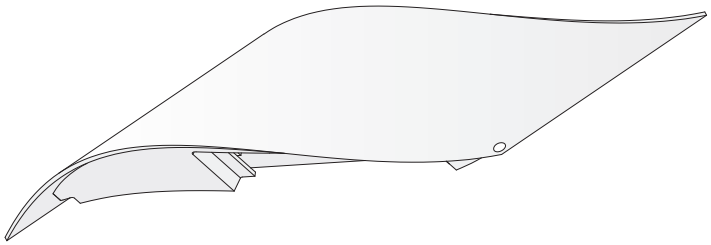

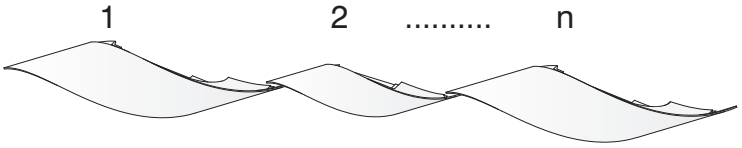

1

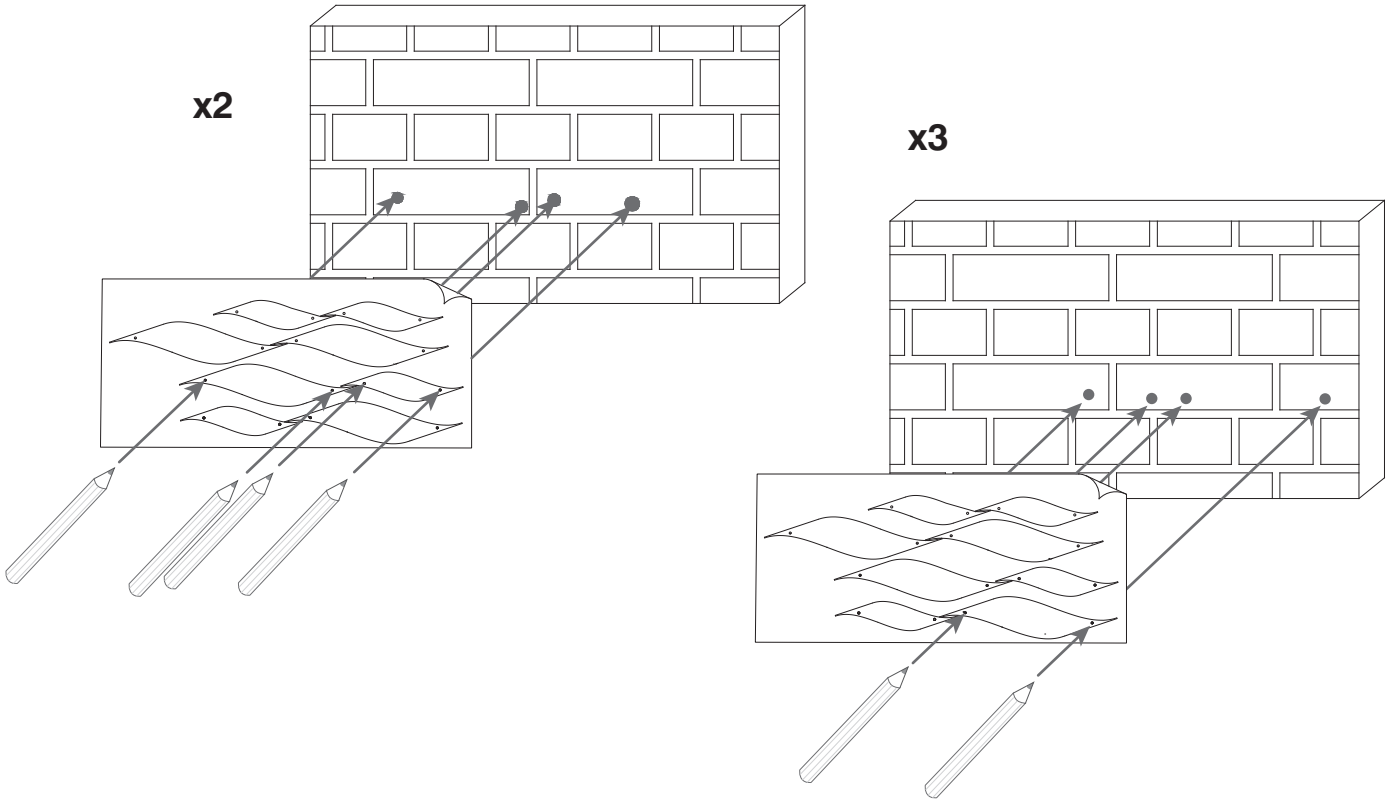

2

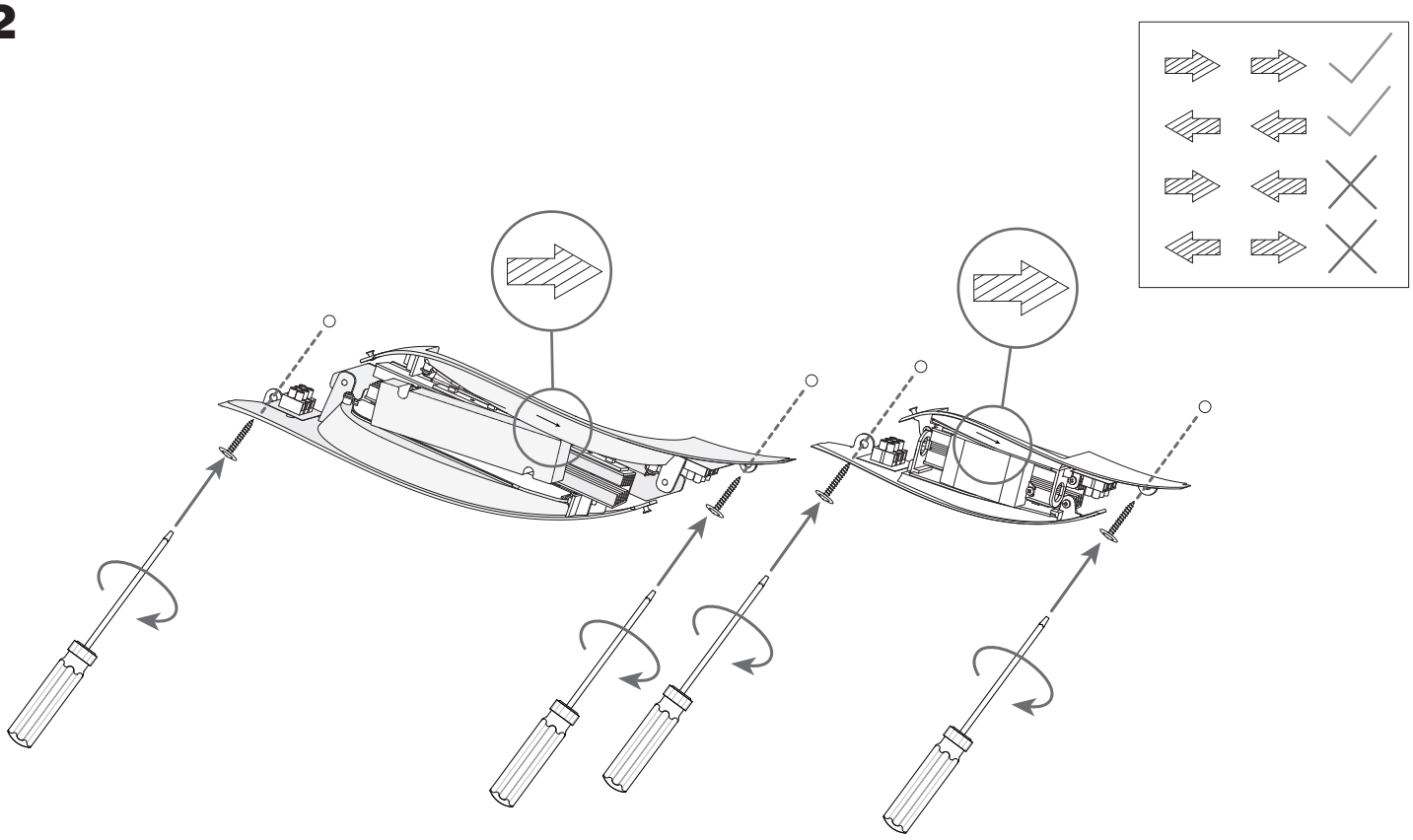

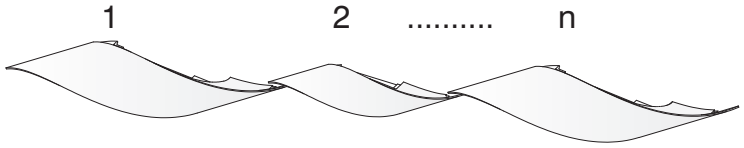

3

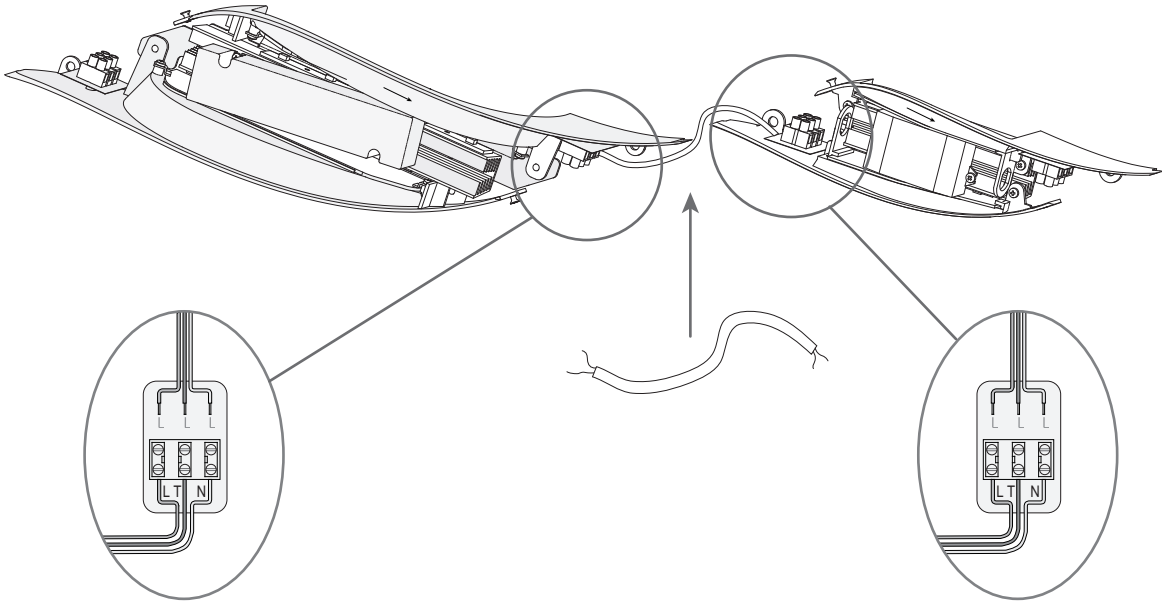
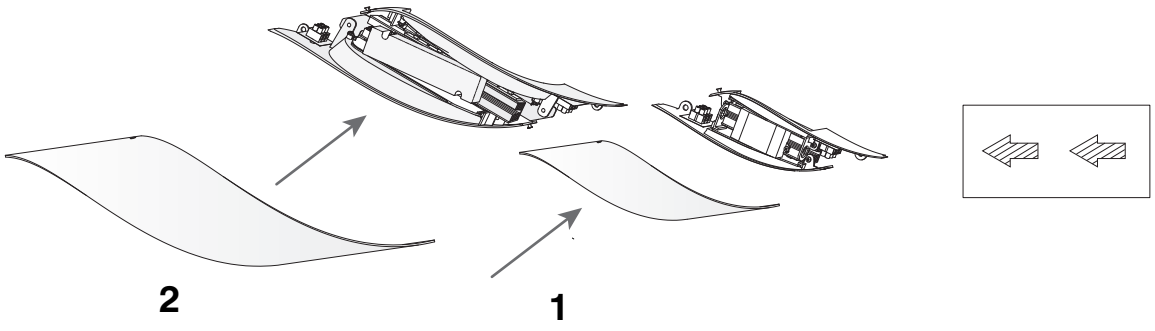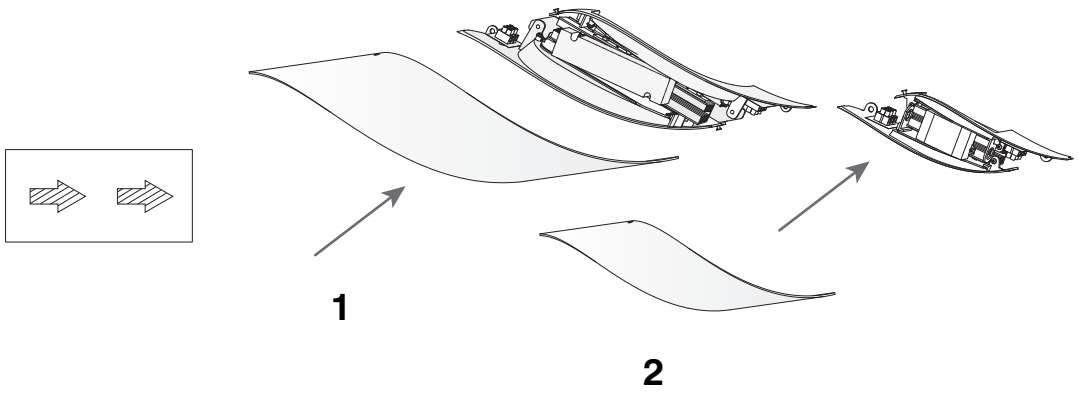
4