# OUTDOOR

15-9560
15-9561

①

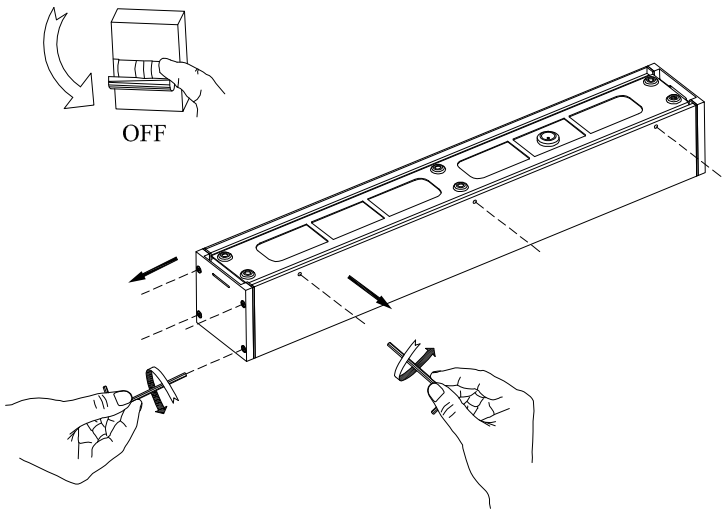


②

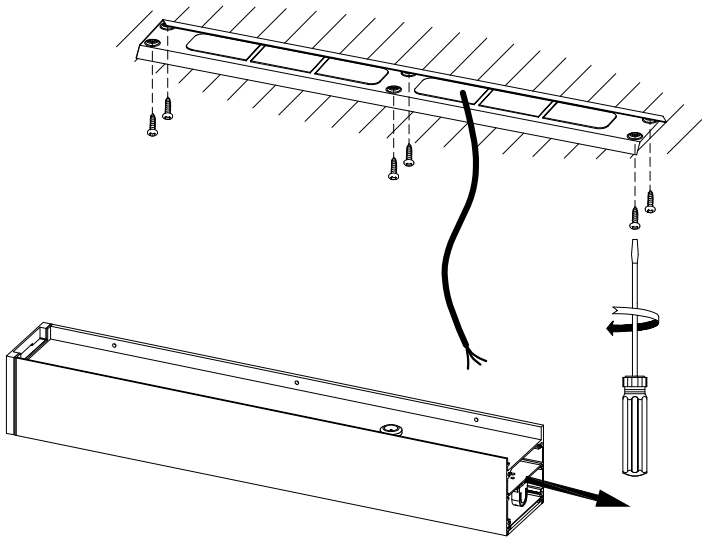

③

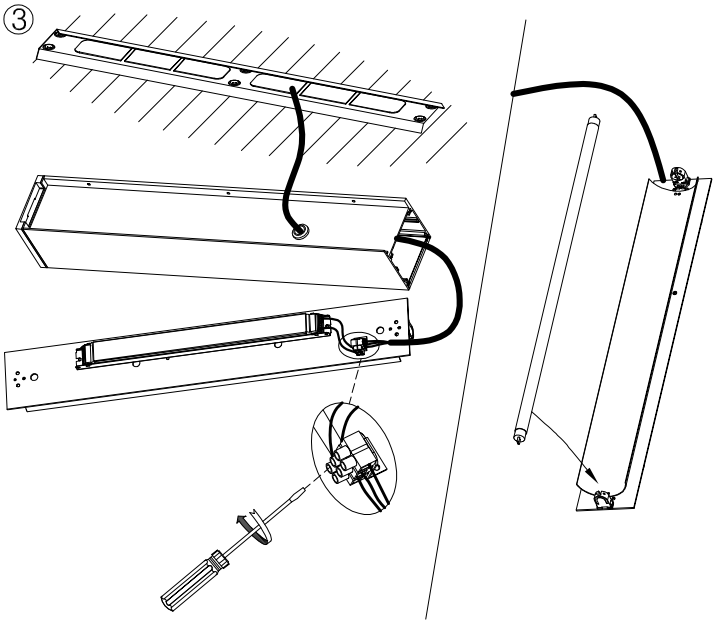

④

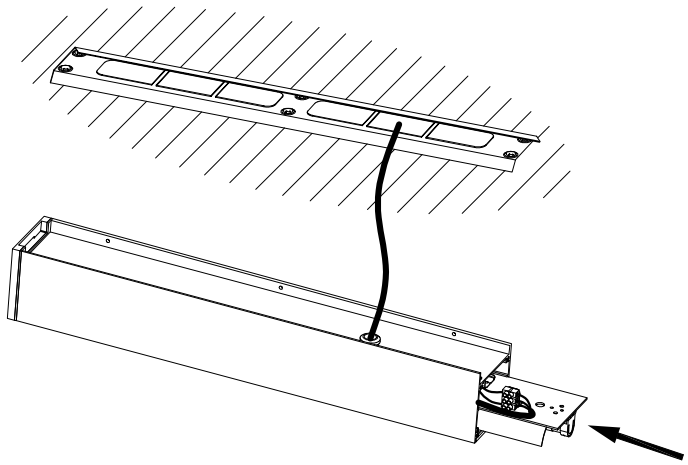

⑤

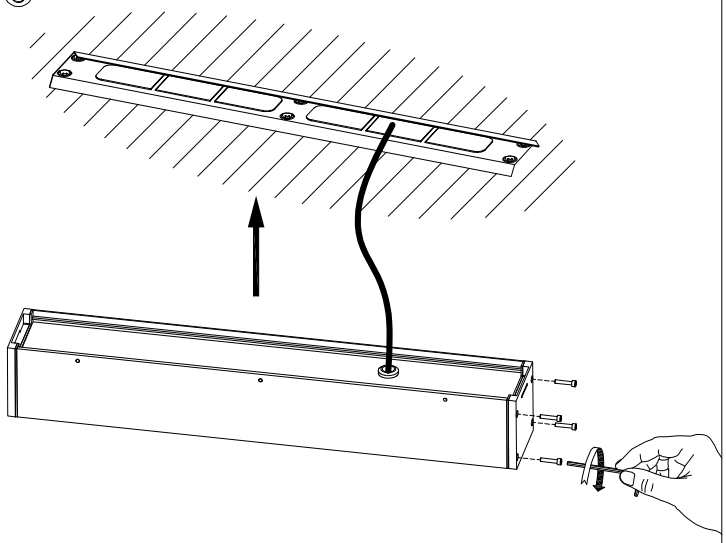

⑥

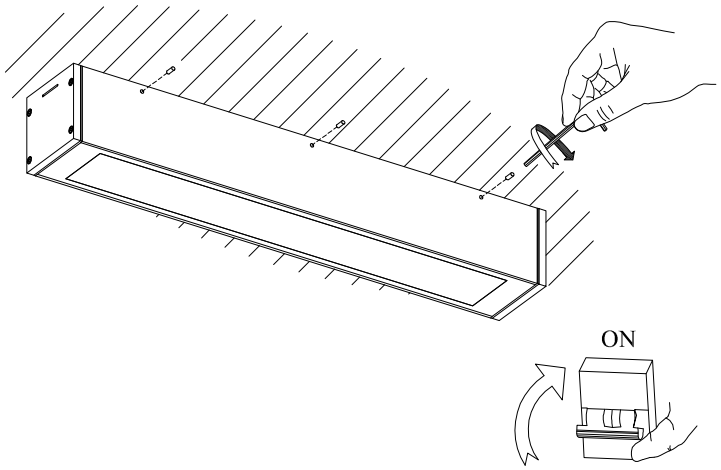


13-10-11