OUT

GALILEI
05-9409-34-M3

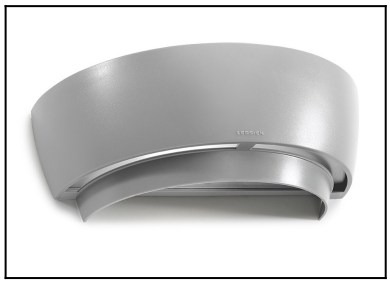

The photograph may not match the reference exactly. Please read the product description to identify the finish.

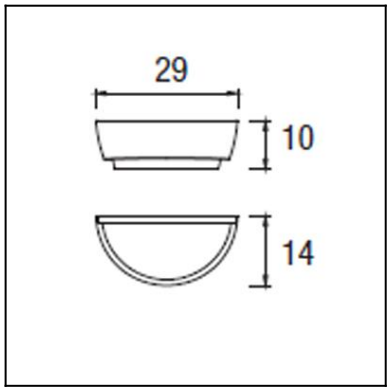

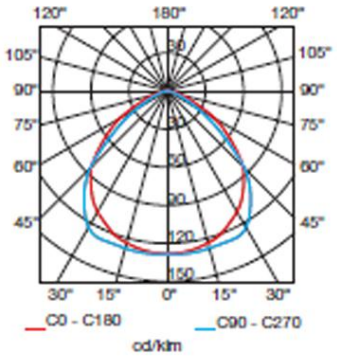

Download photometric file .ldt /.ies

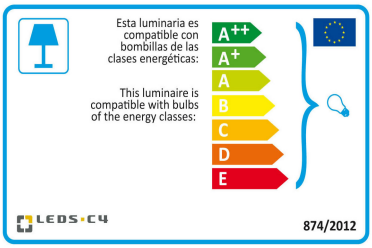

Click on image to download energy label

TECHNICAL CHARACTERISTICS

Type:	Wall fixture
IP Protection degrees:	IP54
IK Protection degrees:	IK08
Light source 1:	1 x E27 MAX 23W Maximum lamp length: 200.00 mm Maximum lamp diameter: 52.00 mm
Total power consumption (W):	23
Voltage / Frequency:	230V/50-60Hz
Warranty (Years):	2
Units per box:	6
Net Weight (Kg):	0.535
EAN:	8435111074947

A(CFL)

MATERIALS / FINISHES

Structure material:	ABS Polycarbonate	**Diffuser material:**	Polycarbonate
Structure finish:	Grey	**Diffuser finish:**	Matt

LEDS-C4 reserves the right to make the necessary technical changes they deem adequate, in order to improve the features of the product.
Please consult the sales team to clarify any doubt.

(+34) 973 468 100
leds-c4@leds-c4.com
www.leds-c4.com

Luminaire		**Measurem.**		**Lamp**	
Code	05-9409	Code	05-9409	Code	PLEC23
Name	Aplique Galilei 1x23W	Name	Aplique Galilei 1x23W	Number	1
Line	Eulumdat	Date	27-12-2010	Position	

Efficiency	47.89%	Coordinate system	CG	Total Flux	1500.00 lm
Maximum value	183.18 cd	Position	C=90.00 G=65.00	Double Symmetrical	

Rectangular Luminaire	Length	300 mm	Width	140 mm	Height	100 mm
Rectangular Luminous Area	Length	300 mm	Width	140 mm	Height	1 mm

Horizontal Luminous Area	0.042000 m2	Emitting area on Plane 180°	0.000300 m2
Emitting area on Plane 0°	0.000300 m2	Emitting area on Plane 270°	0.000140 m2
Emitting area on Plane 90°	0.000140 m2	Glare area at 76°	0.010452 m2

Symmetry Type	Double Symmetrical	Maximum Gamma Angle	180
Measurement Distance	0.00	Measurement Flux	1500.00 lm

Operator	Asselum	Source voltage	
Temperature	25.00 °C	Source current	
Humidity	60.00 %	Photocell	
Notes			

Luminaire Lamps

Line	Code	Name	Flux [lm]	Pow. [W]	Q.ty
Eulumdat	PLEC23	PLEC23 - 23.00 W	1500.00	23.00	1

C.I.E.	10 37 70 67 48	D DIN 5040	B11
F UTE	--	B NBN	BZ 10

300mm x 140mm

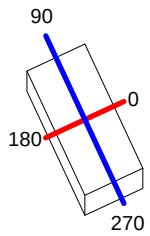

C Halfplanes

180.0 — 0.0

270.0 — 90.0

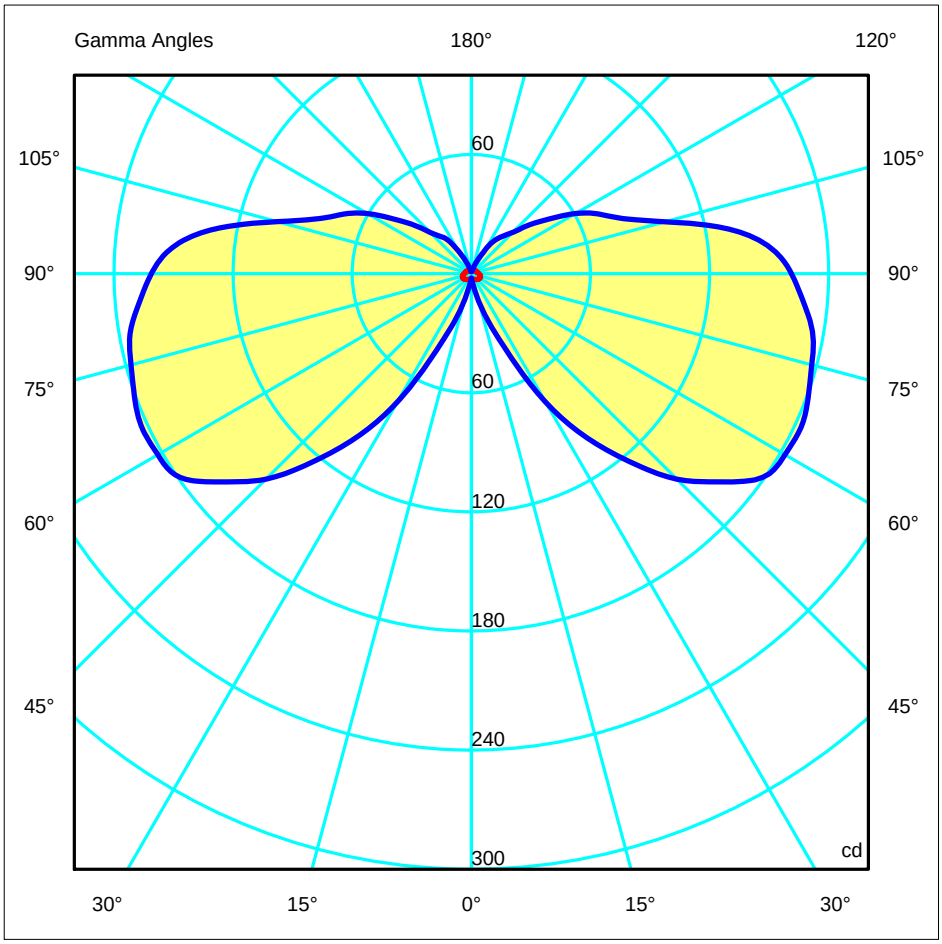

ULOR	15.65 %
DLOR	32.24 %
RN	32.69 %

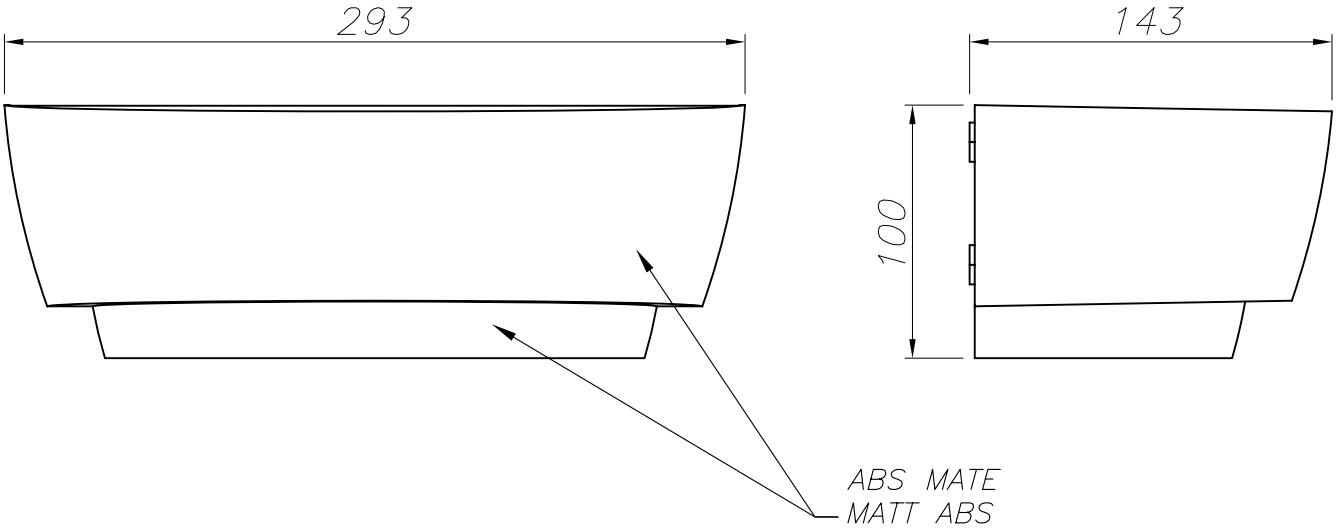

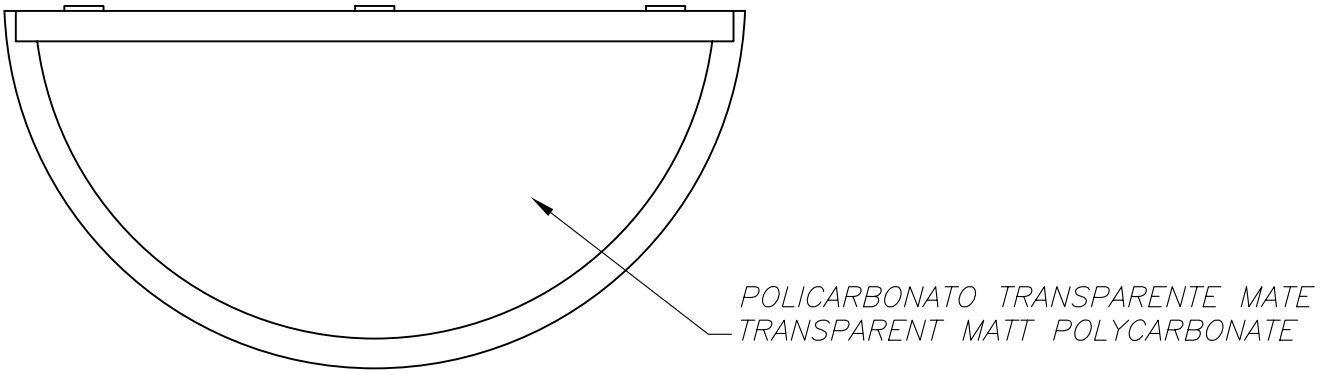

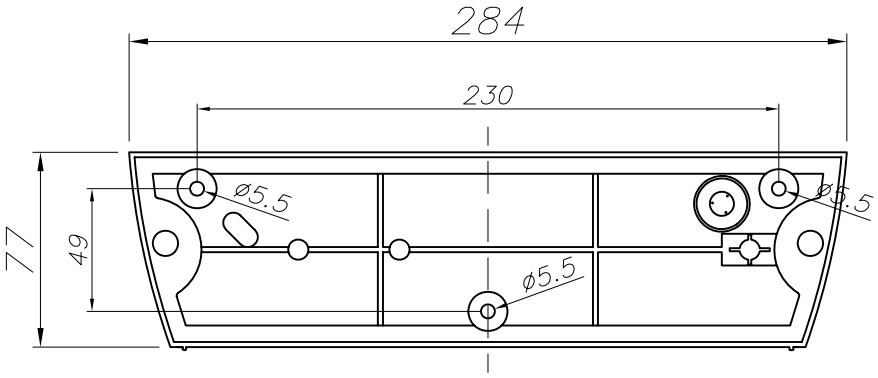

PLANTILLA DE INSTALACIÓN
INSTALLATION TEMPLATE

LEDS-C4

OUTDOOR

05-9409

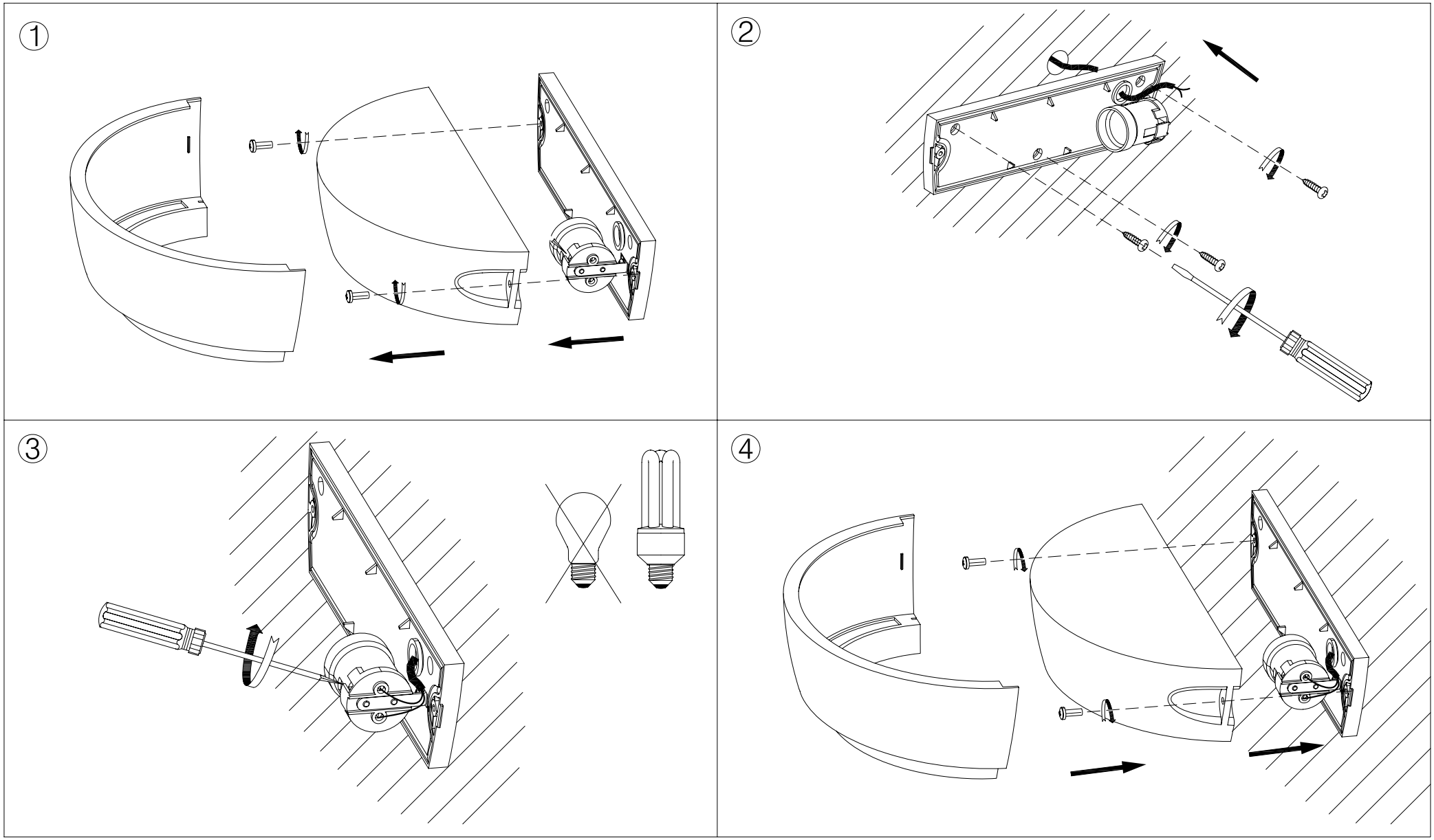

13-01-10