OUT

MICENAS
05-9596-34-37

The photograph may not match the reference exactly. Please read the product description to identify the finish.

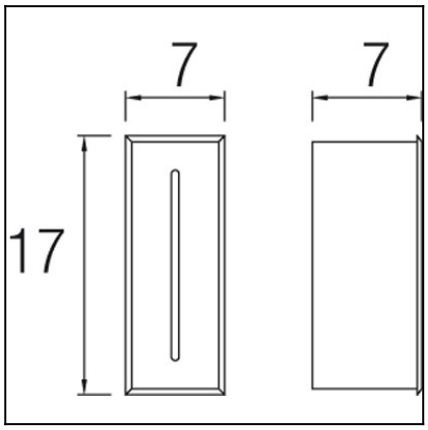

TECHNICAL CHARACTERISTICS

Type:	Uplight
IP Protection degrees:	IP54
Bulb:	1 x LED Cree. Neutral white (5000 - 3700 K)
Power (W):	3
Voltage / Frequency:	100-240V/50-60Hz
Units per box:	12
Net Weight (Kg):	0.42
EAN:	8435111089811

LED SMD

ENERGY SAVING

MATERIALS / FINISHES

Structure material:	Injected aluminium	**Diffuser material:**	Glass
Structure finish:	Grey	**Diffuser finish:**	Transparent

GEAR

Multi-voltage electronic gear included (110-240 V / 50-60 Hz)

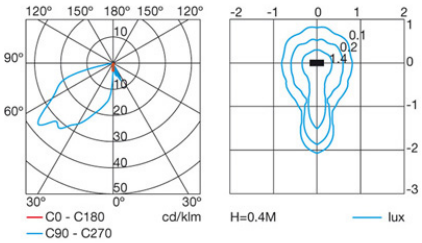

Leds-c4 reserves the right to make the necessary technical changes they deem adequate, in order to improve the features of the product.
Please consult the sales team to clarify any doubt.

(+34) 973 468 100
leds-c4@leds-c4.com
www.leds-c4.com