IN

ACE 15-2412-BW-BW

Design by Josep Patsí

The photograph may not match the reference exactly. Please read the product description to identify the finish.

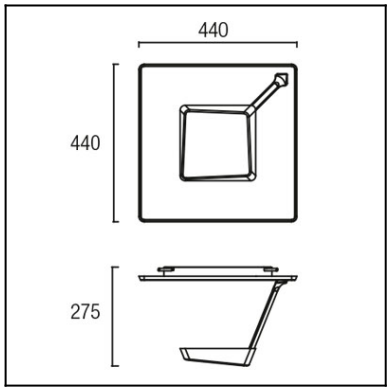

Download photometric file .ldt /.ies

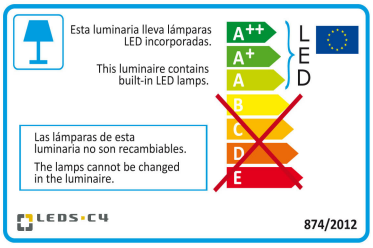

Click on image to download energy label

TECHNICAL CHARACTERISTICS

Type:	Ceiling fixture
IP Protection degrees:	IP23
Light source 1:	12 x LED Cree 27W Warm White - 3000K 2295 lm(N) CRI 80
Voltage / Frequency:	100-240V/50-60Hz
Warranty (Years):	2
Option to extend the guarantee (Years):	5
Units per box:	1
Net Weight (Kg):	3.895
EAN:	8435381407902

MATERIALS / FINISHES

Structure material:	Aluminium Steel	**Diffuser material:**	Methacrylate
Structure finish:	Matt white	**Diffuser finish:**	Transparent

GEAR

Multi-voltage electronic gear included (110-240 V / 50-60 Hz)

Lm(N): Nominal flow of light in actual working conditions. Its actual flow will depend on the environmental conditions and the efficiency of the optics and/or diffuser.

LEDS-C4 reserves the right to make the necessary technical changes they deem adequate, in order to improve the features of the product.
Please consult the sales team to clarify any doubt.

(+34) 973 468 100
leds-c4@leds-c4.com
www.leds-c4.com

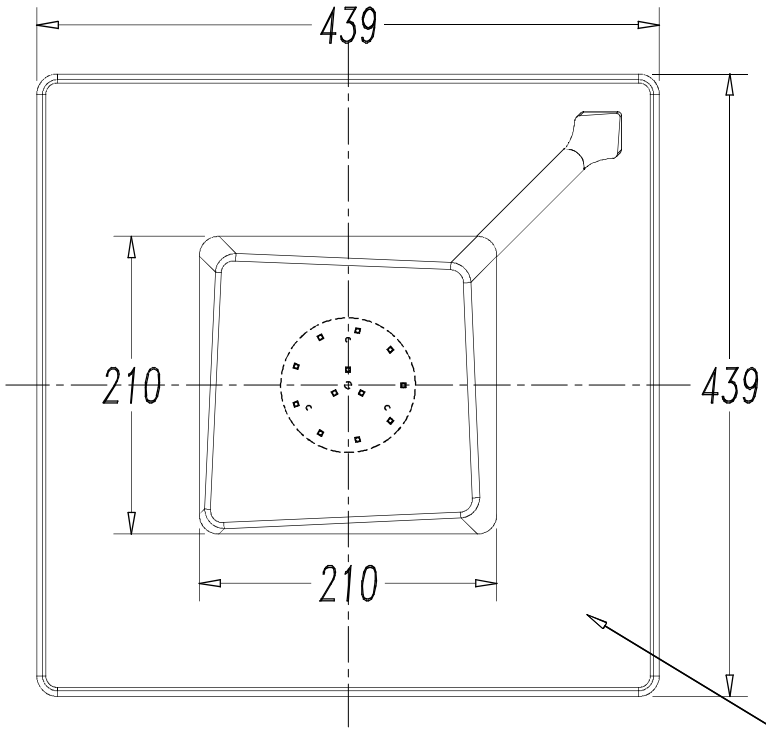
439
210
439
210

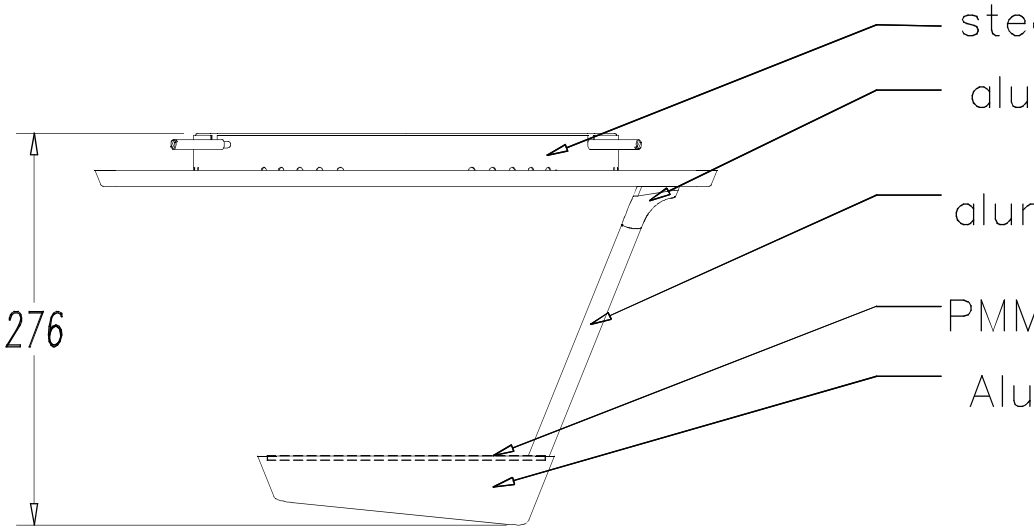
276

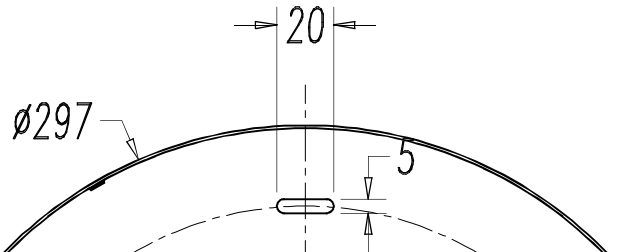
20
ø297
5
ø240

1

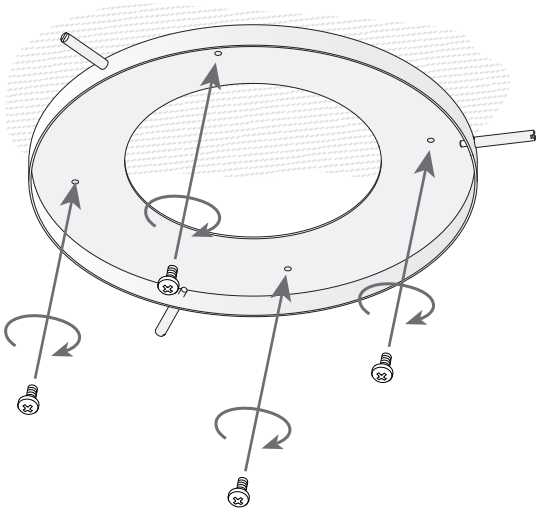

2

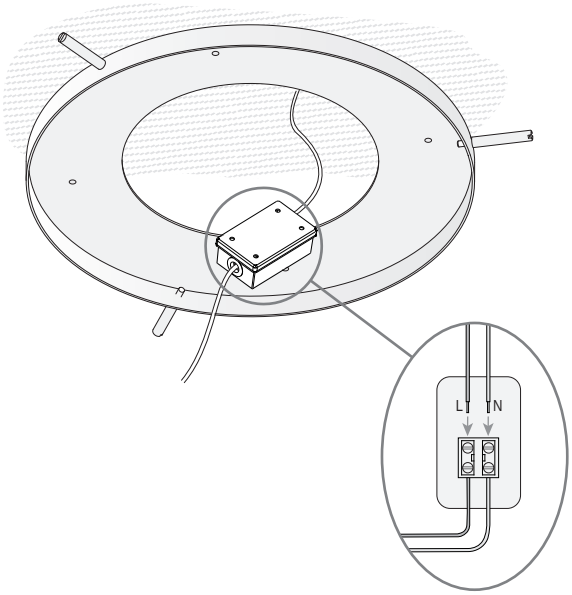

3

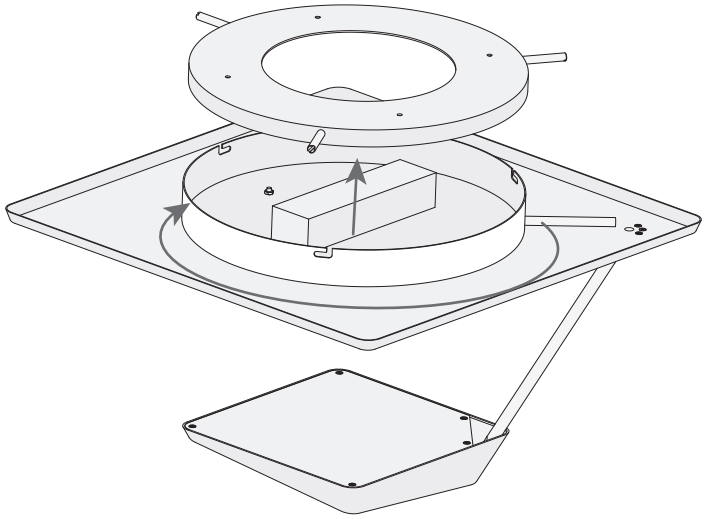
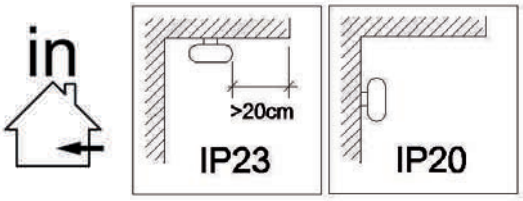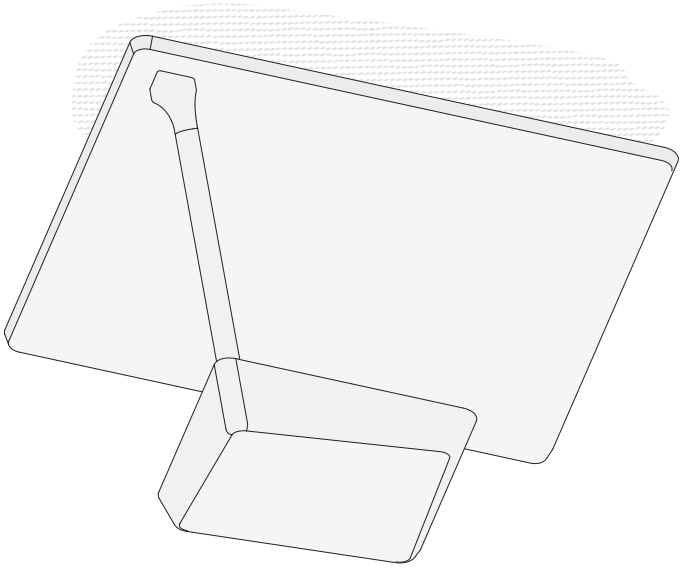
4