IN

# BALMORAL
# 05-2814-81-14

The photograph may not match the reference exactly. Please read the product description to identify the finish.

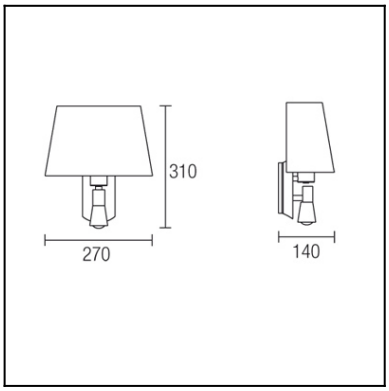


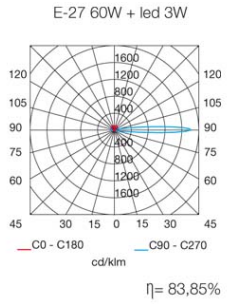


η= 83,85%

Download photometric file .ldt /.ies

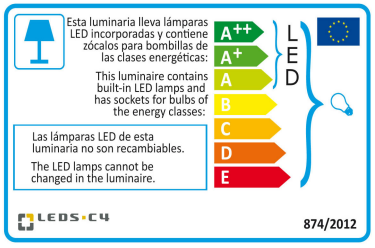


Click on image to download energy label

## TECHNICAL CHARACTERISTICS

| | |
|---|---|
| Type: | Wall fixture |
| IP Protection degrees: | IP20 |
| Light source 1: | 1 x LED Cree<br>3W<br>Warm White - 3000K<br>182 lm(N)<br>CRI 80 |
| Light source 2: | 1 x E27<br>60W<br>Maximum lamp length: 150.00 mm |
| Angle of the optics / Reflector: | 30º |
| Voltage / Frequency: | 100-240V/50-60Hz |
| Warranty (Years): | 2 |
| Option to extend the guarantee (Years): | 5 |
| Units per box: | 6 |
| Net Weight (Kg): | 0.98 |
| EAN: | 8435111066027 |

## MATERIALS / FINISHES

**Structure material:** Steel
**Structure finish:** Satin nickel
**Diffuser material:** Fabric shade
**Diffuser finish:** White

## GEAR

Multi-voltage electronic gear included (110-240 V / 50-60 Hz)

Lm(N): Nominal flow of light in actual working conditions. Its actual flow will depend on the environmental conditions and the efficiency of the optics and/or diffuser.

LEDS-C4 reserves the right to make the necessary technical changes they deem adequate, in order to improve the features of the product.
Please consult the sales team to clarify any doubt.

(+34) 973 468 100
leds-c4@leds-c4.com
www.leds-c4.com

| Luminaire | | Measurem. | | Lamp | |
|---|---|---|---|---|---|
| Code | 05-2814-81-05 | Code | 05-2814-81-05 | Code | - |
| Name | Aplique BALMORAL 60W E27 + led | Name | Aplique BALMORAL 60W E27 + led | Number | 2 |
| Line | Eulumdat | Date | 12-04-2010 | Position | |

| | | | | | |
|---|---|---|---|---|---|
| Efficiency | 83.85% | Coordinate system | CG | Total Flux | 814.00 lm |
| Maximum value | 1807.98 cd | Position | C=90.00 G=90.00 | Sym. on planes | 270-90 |

| | | | | | | | |
|---|---|---|---|---|---|---|---|
| Rectangular Luminaire | Length | 320 mm | Width | 270 mm | Height | 130 mm | |
| Rectangular Luminous Area | Length | 320 mm | Width | 270 mm | Height | 130 mm | |

| | | | |
|---|---|---|---|
| Horizontal Luminous Area | 0.086400 m2 | Emitting area on Plane 180° | 0.041600 m2 |
| Emitting area on Plane 0° | 0.041600 m2 | Emitting area on Plane 270° | 0.035100 m2 |
| Emitting area on Plane 90° | 0.035100 m2 | Glare area at 76° | 0.061266 m2 |

| | | | |
|---|---|---|---|
| Symmetry Type | Sym. on planes 270-90 | Maximum Gamma Angle | 180 |
| Measurement Distance | 0.00 | Measurement Flux | 814.00 lm |

| | | | |
|---|---|---|---|
| Operator | Asselum | Source voltage | |
| Temperature | 25.00 °C | Source current | |
| Humidity | 60.00 % | Photocell | |
| Notes | | | |

**Luminaire Lamps**

| Line | Code | Name | Flux [lm] | Pow. [W] | Q.ty |
|---|---|---|---|---|---|
| Eulumdat | - | - - 31.50 W | 407.00 | 31.50 | 2 |

| | | | |
|---|---|---|---|
| C.I.E. | 19 38 58 33 84 | D DIN 5040 | D12 |
| F UTE | 0.28 J + 0.56 T | B NBN | BZ 9 / 1 / BZ 10 |

320mm x 270mm

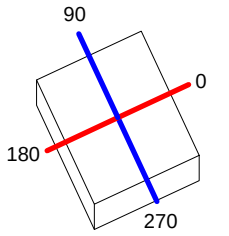


C Halfplanes

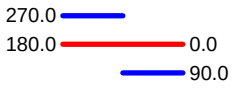


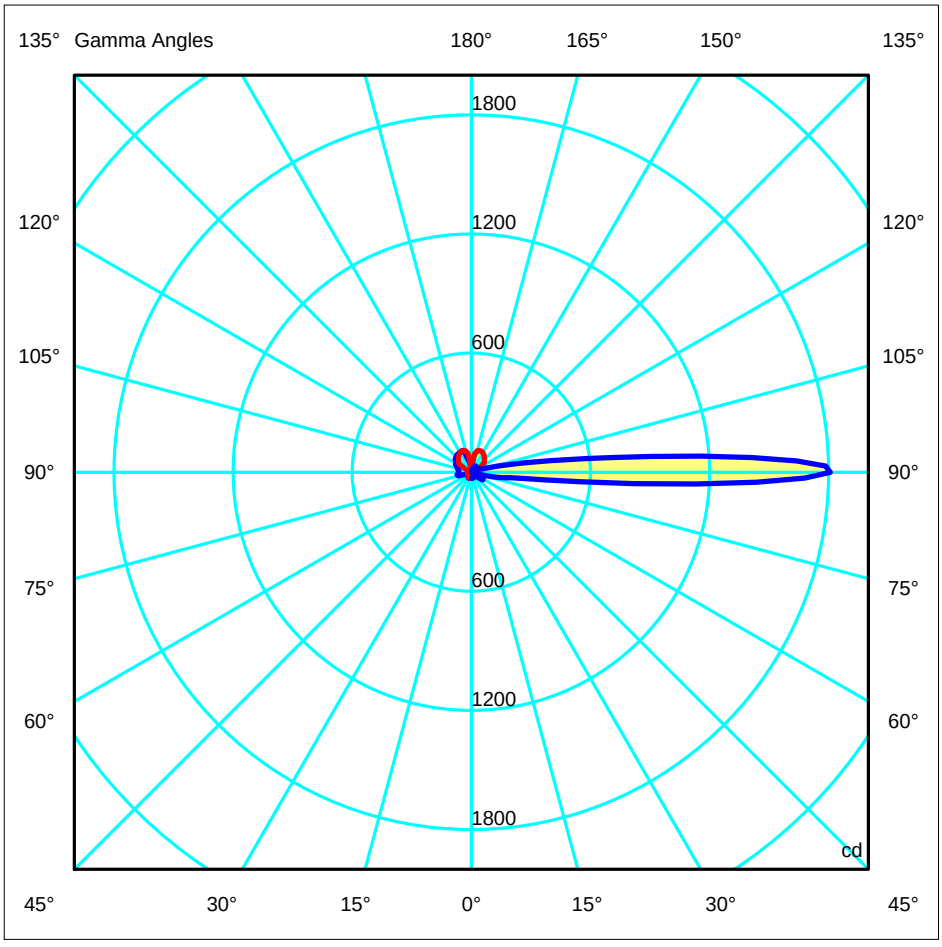


| | |
|---|---|
| ULOR | 55.77 % |
| DLOR | 28.08 % |
| RN | 66.51 % |

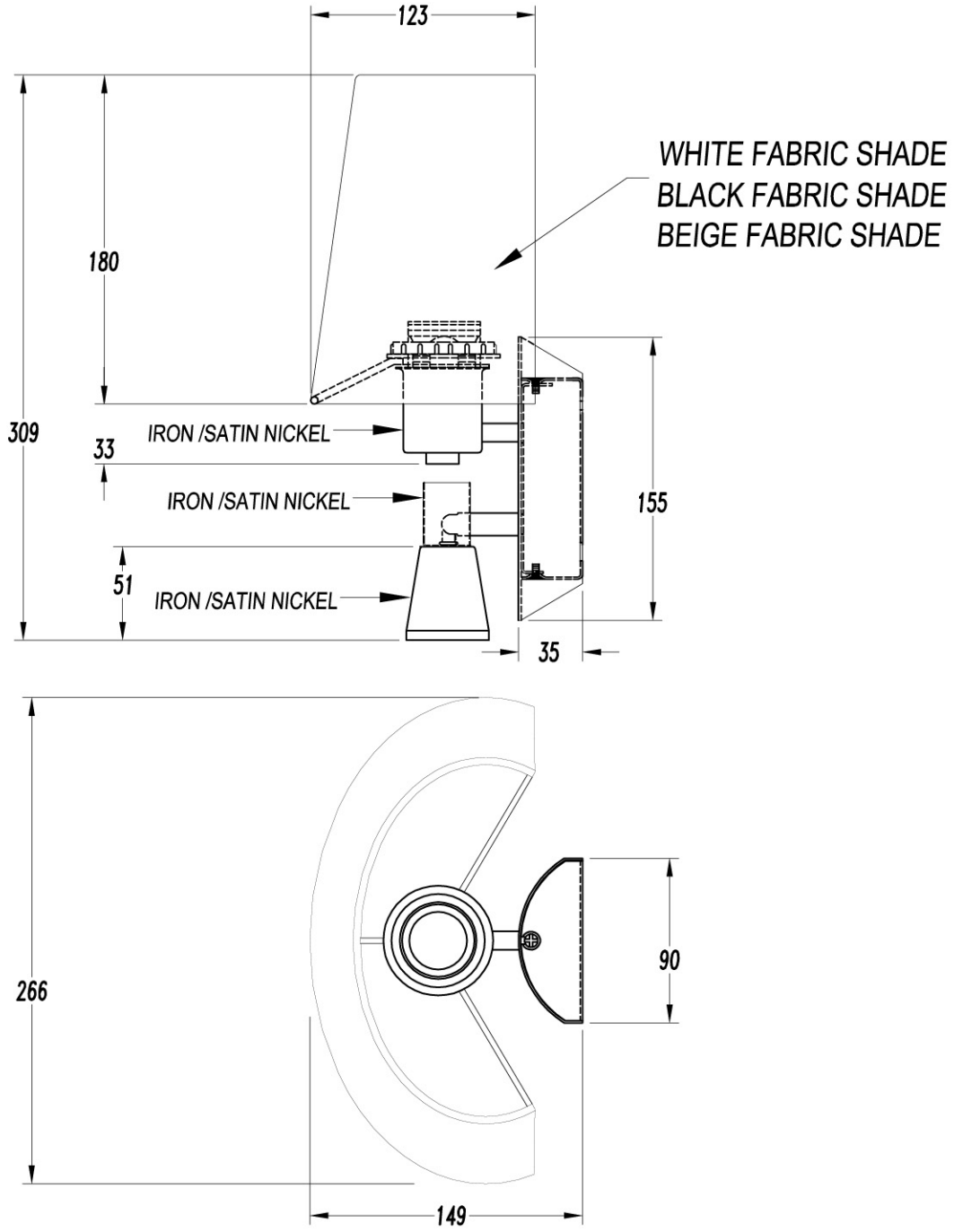
123
WHITE FABRIC SHADE
BLACK FABRIC SHADE
BEIGE FABRIC SHADE
180
309
IRON /SATIN NICKEL
33
IRON /SATIN NICKEL
155
51
IRON /SATIN NICKEL
35
266
90
149
IRON /SATIN NICKEL
27
9
34
5
10
60
ø10.5
5
110
10
87

19-06-09

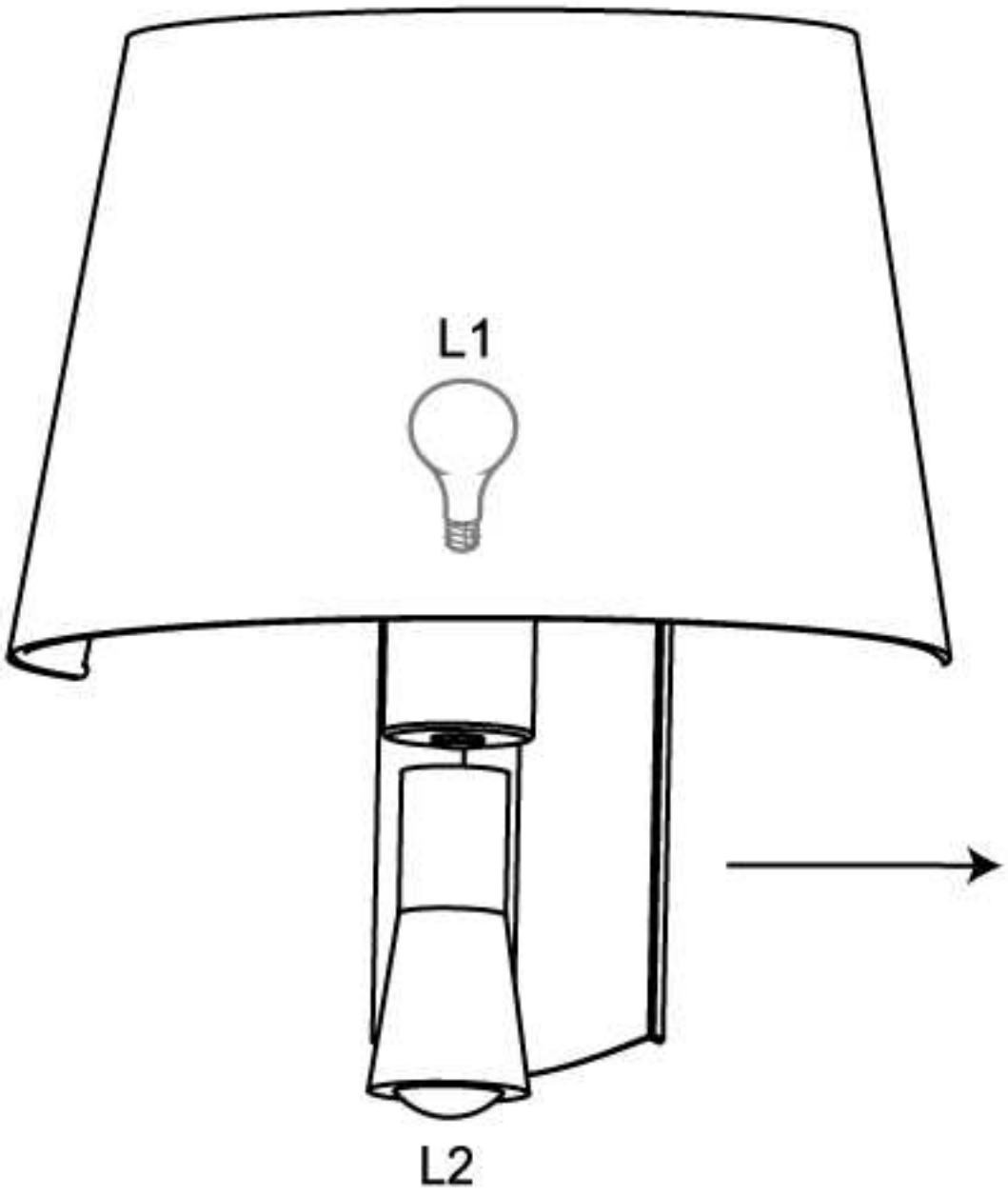
L1
L2