KOHLER® FAUCETS

CORALAIS™

BATH AND SHOWER FAUCET TRIM

K-P15601

PROJECT PACK

ALSO K-304, K-306-KS, K-308

FEATURES

- *Metal construction*
- *Available with 4-7/8" diverter bath spout with N.P.T. or slip-fit connection*
- *Lever handle*
- *Packaged 12 per case*

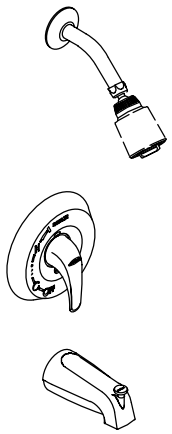

CODES/STANDARDS APPLICABLE

Specified model meets or exceeds the following:

- *ASME/ANSI A112.18.1M*
- *CSA International B125*
- *IAPMO/UPC listed*

COLORS/FINISHES

- CP Polished Chrome
- PB Polished Brass
- Other Refer to Faucets Price Book for additional finishes

SPECIFIED MODEL: For complete faucet, both faucet trim and mixing valve must be specified.

Model	Description			
K-P15601-4	With Lever Handle and N.P.T. Spout	☐CP		
K-P15601-4S	With Lever Handle and Slip-Fit Spout	☐CP	☐PB	☐Other_____
K-P15601-4N	With Lever Handle and N.P.T. Spout, Less Showerhead	☐CP		
K-P15601-4Y	With Lever Handle and Slip-Fit Spout, Less Showerhead	☐CP	☐PB	☐Other_____

Required Accessory		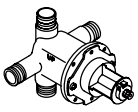	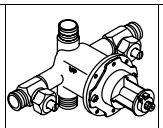	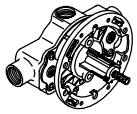
K-304-K	Rite-Temp Valve Without Stops	☐NA		
K-304-KS	Rite-Temp Valve With Stops		☐NA	
K-306-KS	HiFlow Rite-Temp Valve With Integral Stops			☐NA
K-308-K	Non-Pressure Balancing Valve Without Stops	☐NA		
K-308-KS	Non-Pressure Balancing Valve With Stops		☐NA	

PRODUCT SPECIFICATION:

Single-control bath and shower faucet trim shall be of metal construction. Product shall include showerhead with arm and flange, faceplate with lever handle, and 4-7/8" diverter bath spout with N.P.T. or slip-fit connection. Faucet trim shall be Kohler Model K-P15601-_____-_____ and mixing valve shall be Kohler Model K-_____-_____-NA. Project pack valves are packaged twelve per case.

INSTALLATION NOTES

Avoid cross-flow conditions. Do not install shut-off device on either valve outlet.

Cap shower outlet if deck-mount spout, diverter, or handshower is connected to spout outlet.

Install straight pipe or tube drop of 7 to 18” with single elbow between valve and wall-mount spout.

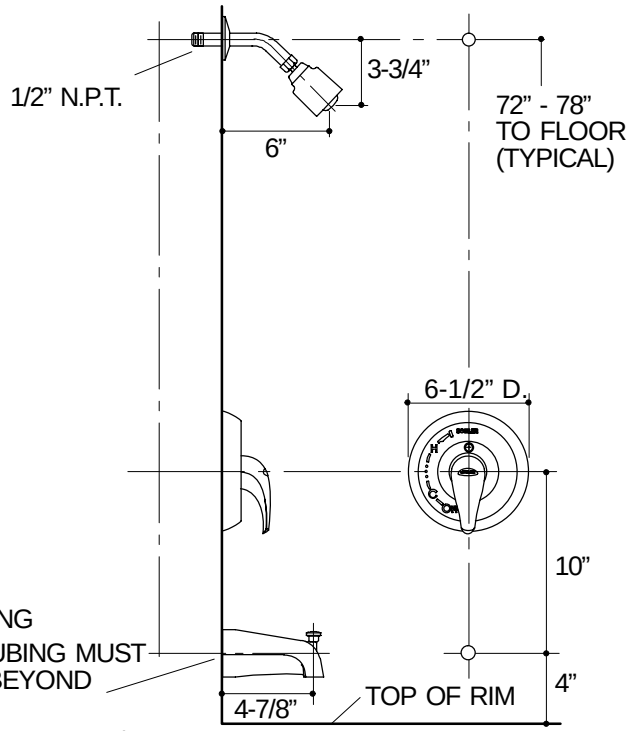

1/2” N.P.T. PIPE OR 5/8” O.D. TUBING

FOR SLIP-FIT SPOUT, 5/8” O.D. TUBING MUST EXTEND 1-1/2” MIN.: 2-7/8” MAX. BEYOND FINISHED WALL.

FOR N.P.T. SPOUT, PIPE MUST EXTEND 3-7/8” BEYOND FINISHED WALL.

332

PRODUCT DIAGRAM