Metris
Metris 230 Single-Hole Faucet
Finishes : **Brushed Nickel** Part no. : **31087821**

Description

Features

- Solid brass
- Aerated spray
- Flow: 1.5 GPM
- Ceramic cartridge
- Includes pop-up assembly
- Swivel range 120°

Optional accessories

- Base Plate for Contemporary Single-Hole Faucets, 6" (#06490USA)

Item details

List Price	$ 499.00

Technology

Eco Smart · Quick Clean · Comfort Zone

Compliance

WaterSense · UPC · ADA

Product image
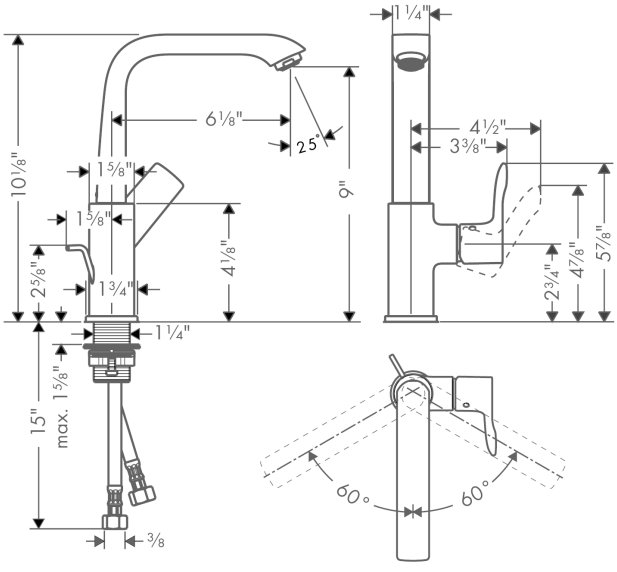
Scale drawing