Assembly Instructions

ITEM No.:PC9090-R

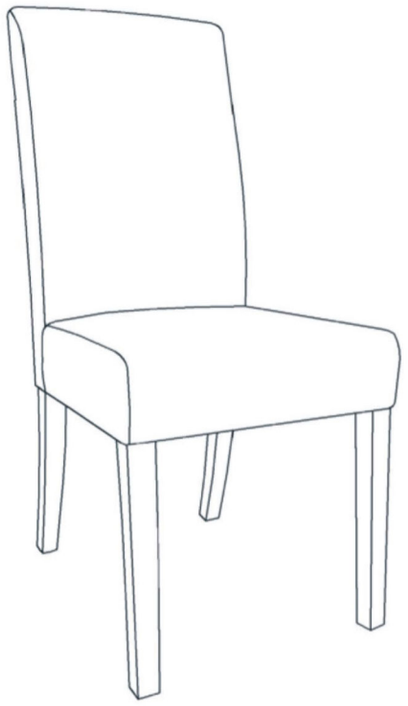

1. It's recommended that 2 adults assemble this product.
2. Do not tighten any bolts or nuts before all bolts & nuts in assembled position.
3. Please check the bolts regularly.
4. Spot Clean with soft damp cloth.
5. Keep the Instruction Manual for future use.
6. Maximum weight capacity: 250 lbs.

MADE IN CHINA

Parts List

Parts ID	Image	Description	Qty
A	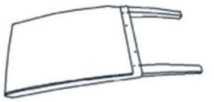	Chair Back	1
B	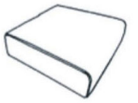	Seat Cushion	1
C		Front Legs	2

Hardware Parts

1		Bolt 2-$\frac{3}{8}$"	4
2		Bolt 2-$\frac{1}{2}$"	4
3		Bolt 1-$\frac{3}{4}$"	1
4		Washer	9
5		Spring Washer	9
6		Allen key	1

Step1

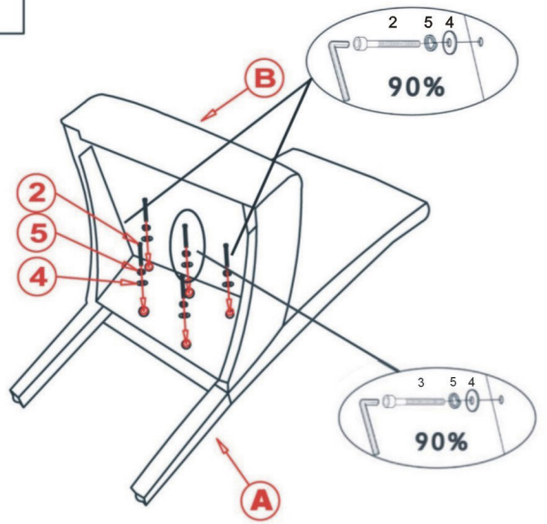

Assemble the seat cushion (B) to chair back (A) using bolt #2, spring washer #5 & flat washer #4 and bolt #3, spring washer #5 & flat washer #4.

DO NOT TIGHTEN THE BOLTS ON THIS STEP.

Step2

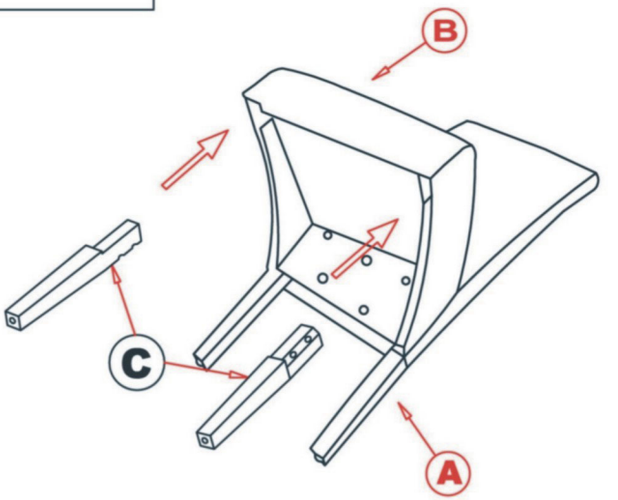

Insert the front leg(C) into the seat part(B).

Step3

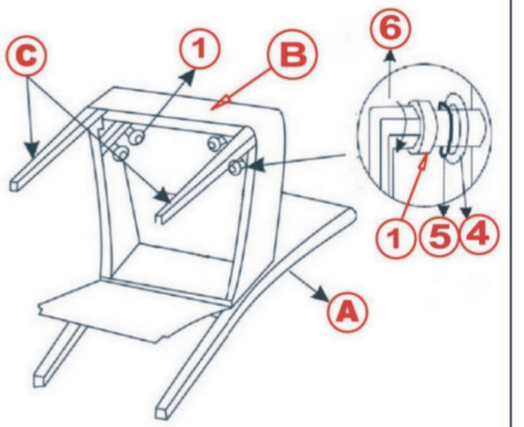

Assemble front legs (C) seat cushion (B) using bolt #1, spring washer #5 & flat washer #4.

DO NOT TIGHTEN THE BOLTS ON THIS STEP.

Step4

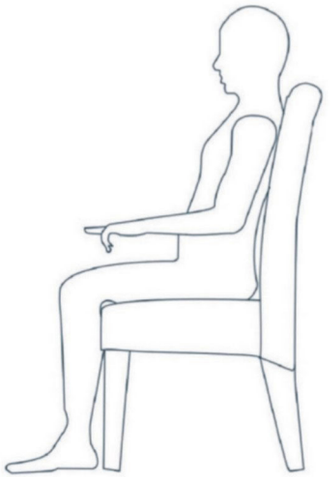

Turn the chair in an upright position and sit on it to make sure the 4 legs are level.

Step5

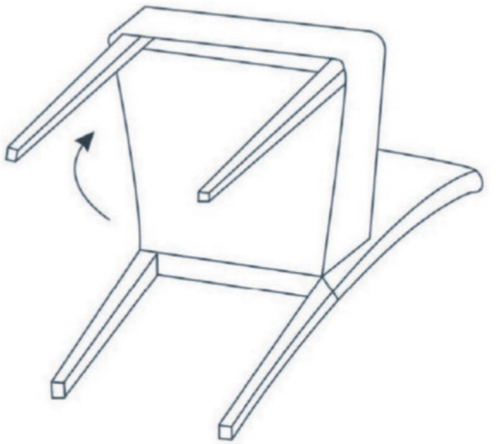

Now tighten all the bolts and cover the bottom seat cover.
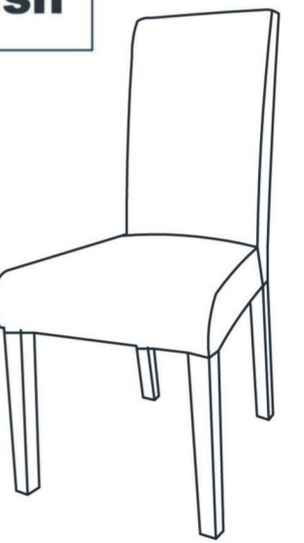
Finish